REV		REVISION STATUS	NOTE	DATE	CHG BY	CHK BY
01	9	DELETE VOLTAGE LABEL,2-1/4-20UNC-2B,ADDED 5/16-24UNF-2B (6)	1 Immediately	Apr.24.14	Y.A	T.Y

CONFIDENTIAL
THE DRAWINGS AND TECHNICAL INFORMATION INCLUDED HEREIN ARE THE PROPERTY OF OGURA INDUSTRIAL CORP AND CAN NOT BE DUPLICATED WITHOUT WRITTEN APPROVAL FROM OIC.

縮小図
変更図

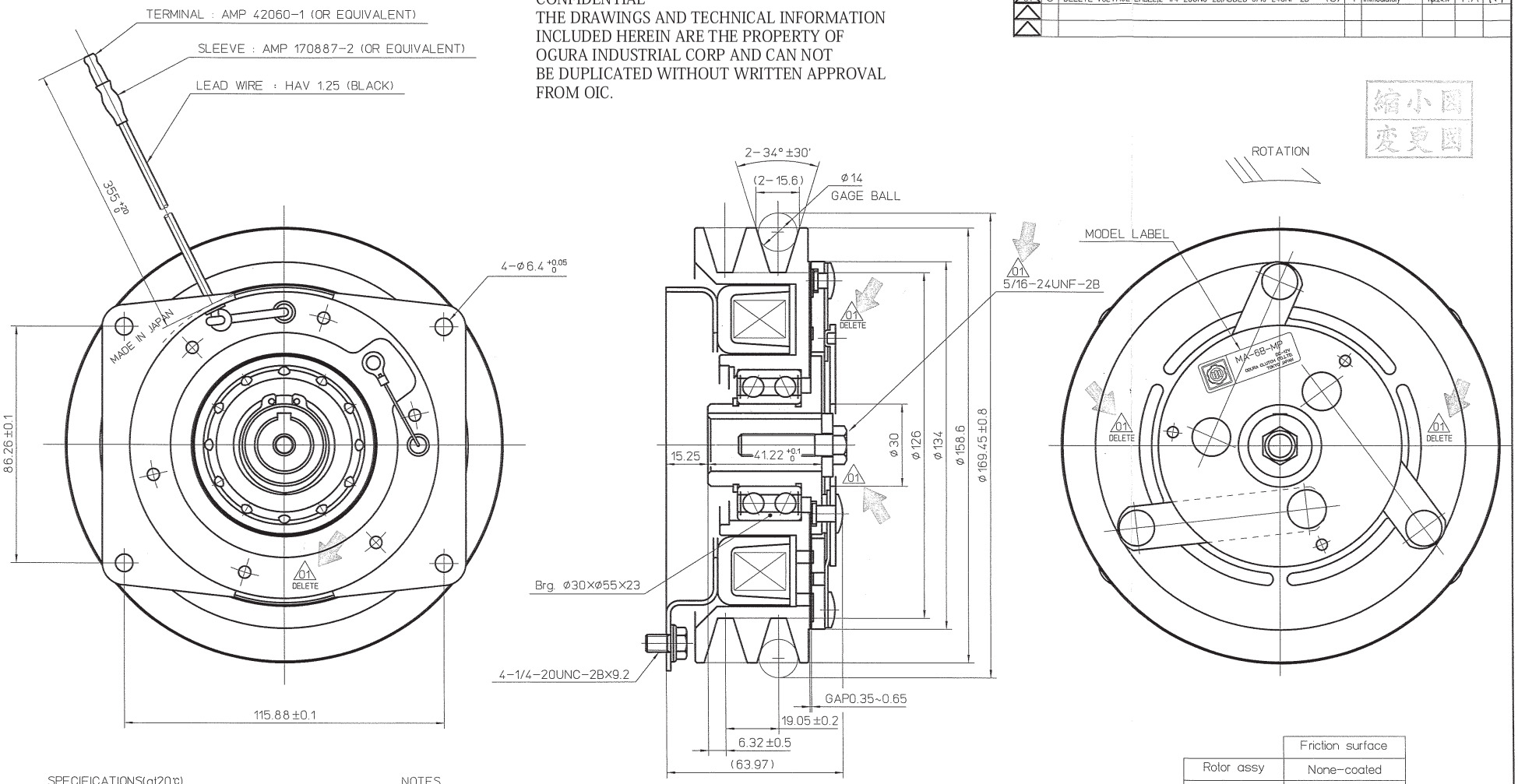

	Friction surface
Rotor assy	None-coated
Armature assy	None-coated

SPECIFICATIONS(at20℃)

1. EXCITING VOLTAGE : D.C.12 V
2. STATIC TORQUE
   INITIAL : 39 N·m
   AFTER BURNISHING : 101 N·m
3. POWER CONSUMPTION : MAX.40 W
4. ROTATION : C.W.

NOTES

SURFACE TREATMENT :
BLACK PAINTING (CATHODIC ELECTRO-DEPOSITION)
EXCEPT FOLLOWING PARTS
FRICTION SURFACE
ARMATURE (3MFZn8)
RIVET (3MFZn5)
HUB INNER DIA.
FIELD CORE COIL ASSY (3MFZn8)

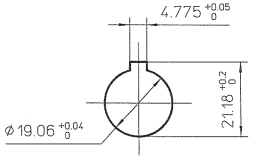

BORE DIA.

SURFACE ROUGHNESS UNLESS OTHERWISE SPECIFIED	GENERAL TOLERANCE FOR CLASS M		
	RANGE OVER	TO	TOL.
▽ 50S	0.5	6	± 0.1
▽▽ 25S	6	30	± 0.2
▽▽▽ 6S	30	120	± 0.3
▽▽▽ 3S	120	315	± 0.5
▽▽▽▽ 0.8S	315	1000	± 0.8

HISTORY	53677400 01
ISSUE NO	PLANT 2
ISSUE DATE	2014. 5. 14
WORKING PROCESS	
MATERIAL	
MATERIAL CODE	
MATERIAL SIZE	
HEAT TRTM	O
SURFACE TRTM	O
PARTS CODE	5913100000
	OGURA CLUTCH Co.,LTD.

APPROVED BY	Y. Kuroda	DATE	Apr.04.2014
CHECKED BY	T.Y. Y.I	DATE	Apr.04.2014
DESIGNED BY	Y. arai	DATE	Apr.04.2014
DRAWN BY	E. Oshima	DATE	Apr.02.2014
CUSTOMER	EX		
MODEL	MA-6B-MP		
ASSY NO			
NAME	MAGNETIC CLUTCH		
DWG NO	53677400 01		

SIZE A2
SCALE 1/1