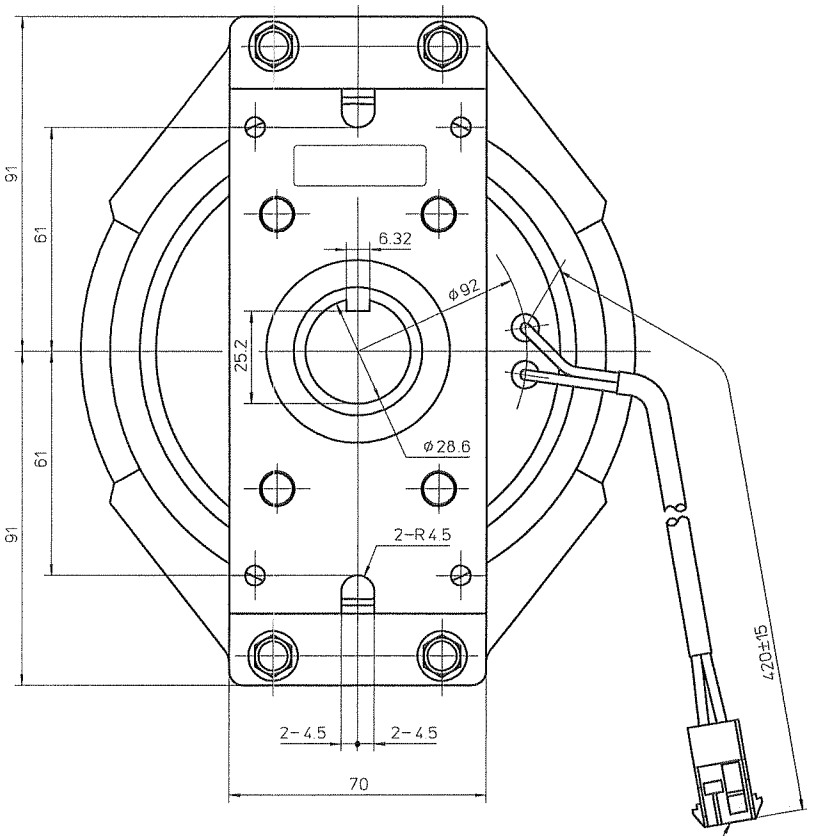

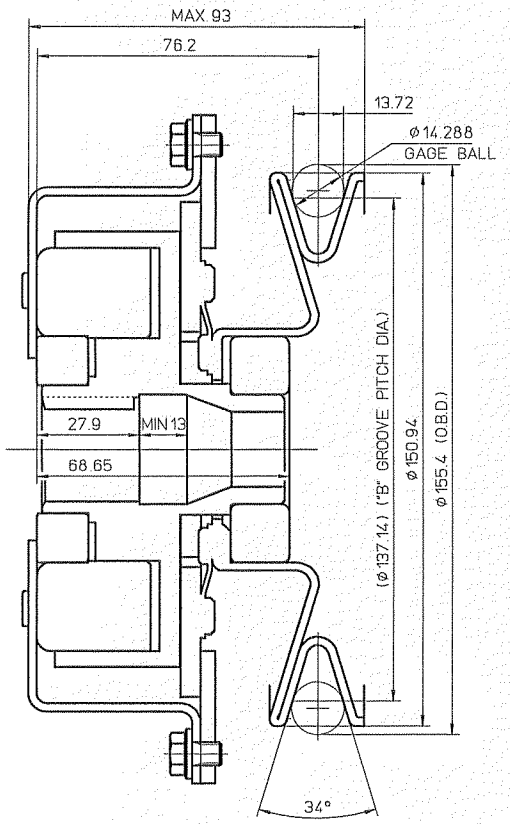

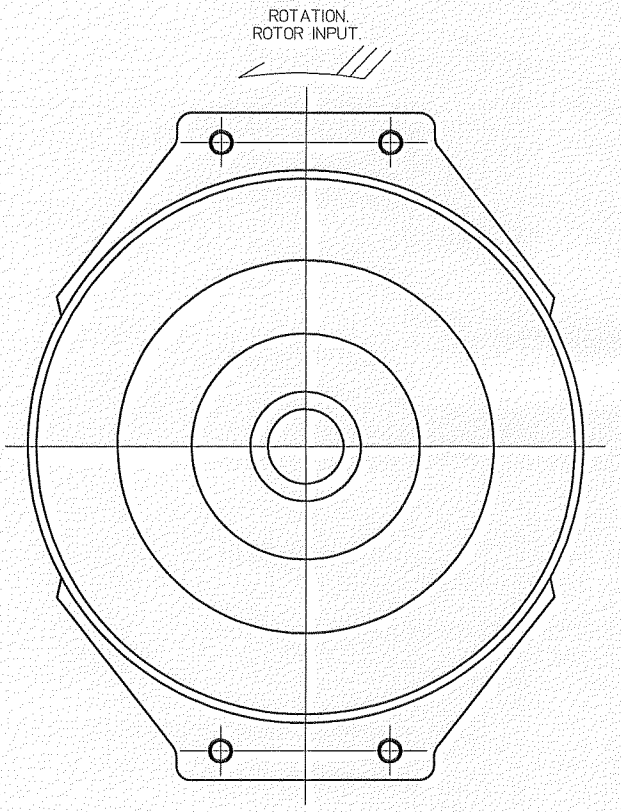

TERMINAL : AMP #350536-1
(OR EQUIVALENT)

HOUSING : AMP #1-480699-0
(OR EQUIVALENT)

SPECIFICATIONS (at20℃)
EXCITING VOLTAGE D.C. 12V
STATIC CLUTCH TORQUE
INITIAL MIN. 35 N·m
AFTER BURNISHING MIN. 118 N·m
REFERENCE MAX. TORQUE 160 N·m
STATIC BRAKE TORQUE
INITIAL MIN. 1.5 N·m
AFTER BURNISHING MIN. 3 N·m

GT1.5A-EH01V(D)
#53595500