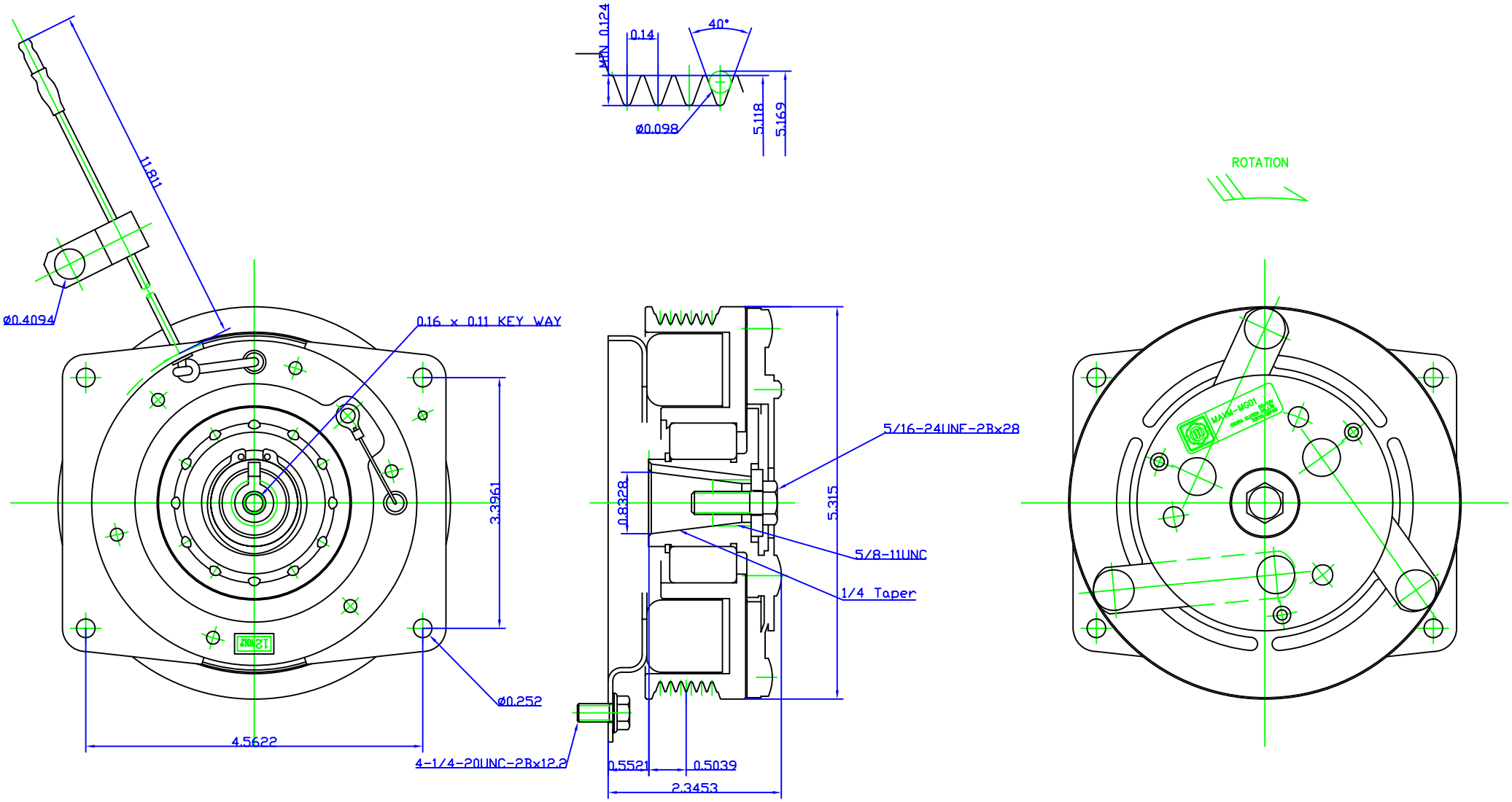
11.811
ø0.4094
0.16 x 0.11 KEY WAY
3.3961
ø0.252
4.5622
4-1/4-20UNC-2Bx12.2
0.14
40°
MIN 0.124
ø0.098
5.118
5.169
5/16-24UNF-2Bx28
0.8328
5.315
5/8-11UNC
1/4 Taper
0.5521
0.5039
2.3453
ROTATION

53481800