REV	REVISION STATUS	NOTE	DATE	CHG BY	CHK BY
△					
△					
△					

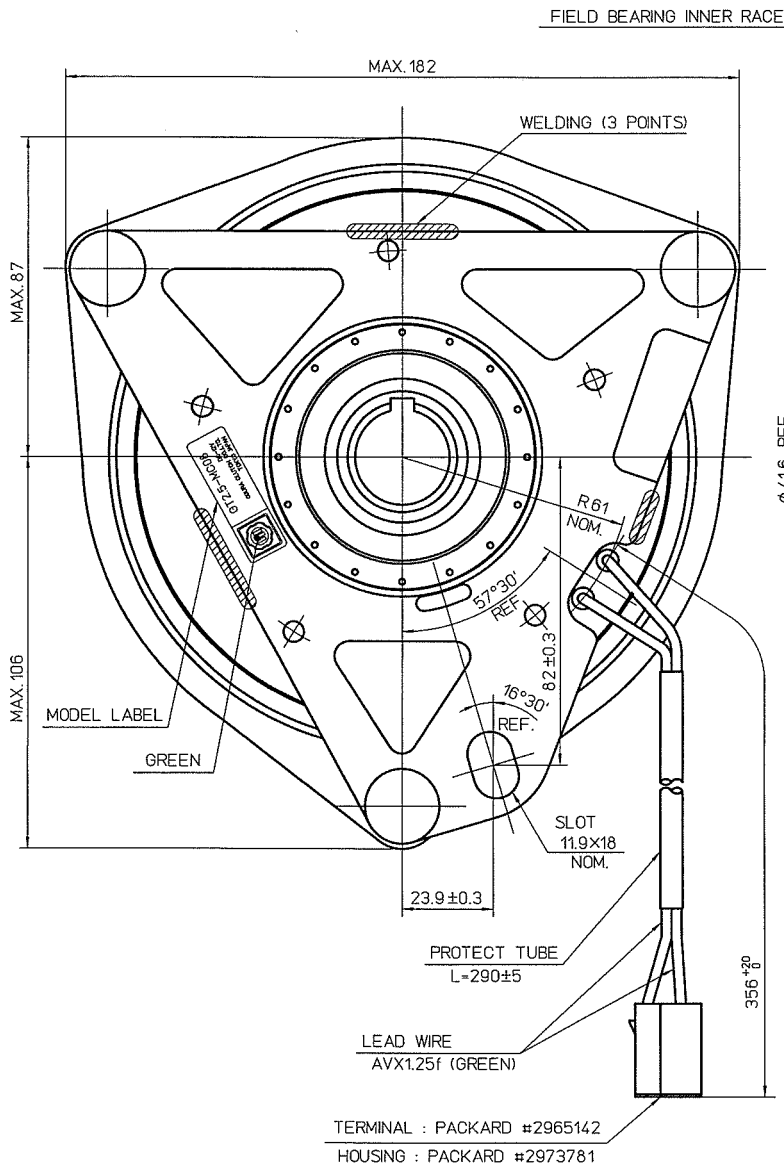

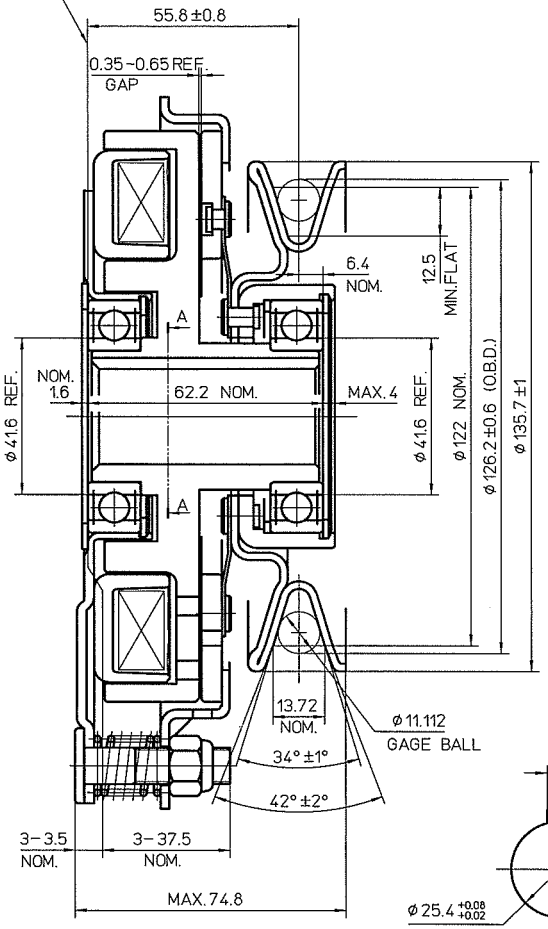

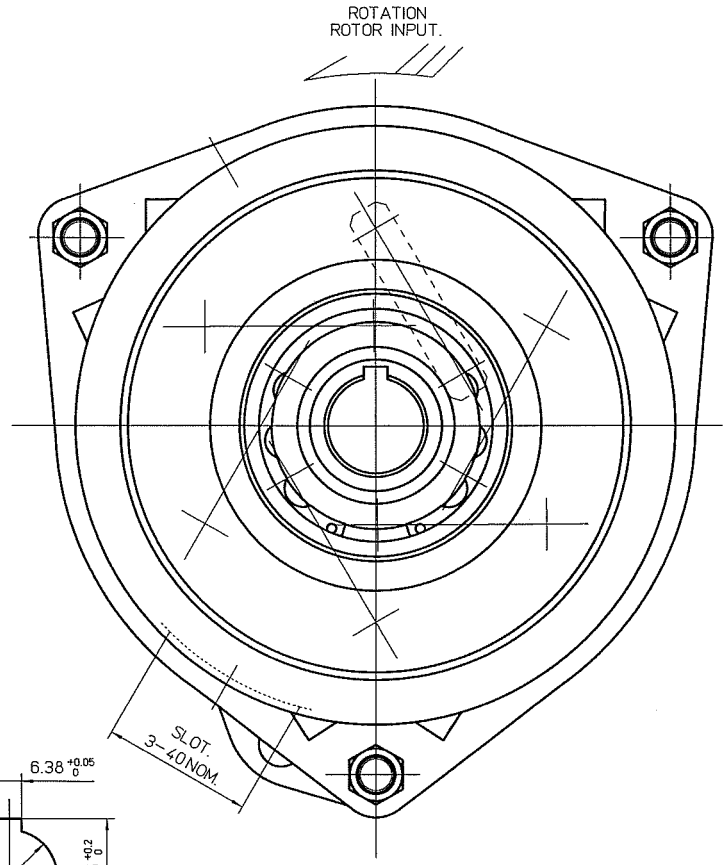

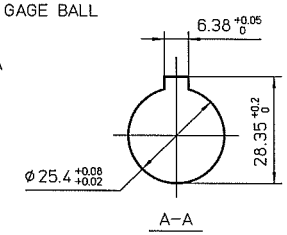

SPECIFICATIONS (at 20°C)	
EXCITING VOLTAGE	D.C. 12 V
POWER CONSUMPTION	MAX. 60 W
STATIC CLUTCH TORQUE	
PREBURNISHED MIN. 59 N·m (at OGURA)	
FINAL NOMINAL. 203 N·m	
STATIC BRAKE TORQUE	
INITIAL MIN. 1 N·m	
FINAL NOMINAL. 3 N·m	
MIN PULL IN VOLTAGE	D.C. 8 V

(COPPER COIL)

NOTES

1. Airgaps must be adjusted when coilsprings and airgap adjustment nuts are incorporated into the clutch/brake at the assembly.
2. Phoshate coating (Armature plate)
3. This clutch model is burnished at the factory before shipment.

	Friction surface
Field rotor assy	None-coated
Armature assy	Coated

本品はクラッチASSY後にクラッチ慣らし作業を行うこと。
(条件はGT2.5-SN01と同一)

SURFACE ROUGHNESS UNLESS OTHERWISE SPECIFIED	GENERAL TOLERANCE FOR CLASS 1			WORKING PROCESS	APPROVED BY Y.Kimura	DATE Oct.20.2009	SIZE A2
	RANGE		TOL.		CHECKED BY N.Ozaki	DATE Oct.20.2009	SCALE 1/1
▽ 50S	OVER 0.5	TO 6	± 0.1	MATERIAL	DESIGNED BY Y.Ono	DATE Oct.20.2009	
▽▽ 25S	6	30	± 0.2	MATERIAL CODE	DRAWN BY M.Arai	DATE Oct.19.2009	
▽▽▽ 6S	30	120	± 0.3	MATERIAL SIZE	CUSTOMER EX		
▽▽▽▽ 3S	120	315	± 0.5	HEAT TRTM 0	MODEL GT2.5-MC08		
▽▽▽▽ 0.8S	315	1000	± 0.8	SURFACE TRTM 0	ASSY NO		
HISTORY 53434500 00					NAME MAGNETIC CLUTCH & BRAKE		
ISSUE NO	PLANT 2			PARTS CODE 5913100000	DWG NO 53434500 00		
ISSUE DATE				OGURA CLUTCH Co.,LTD.			