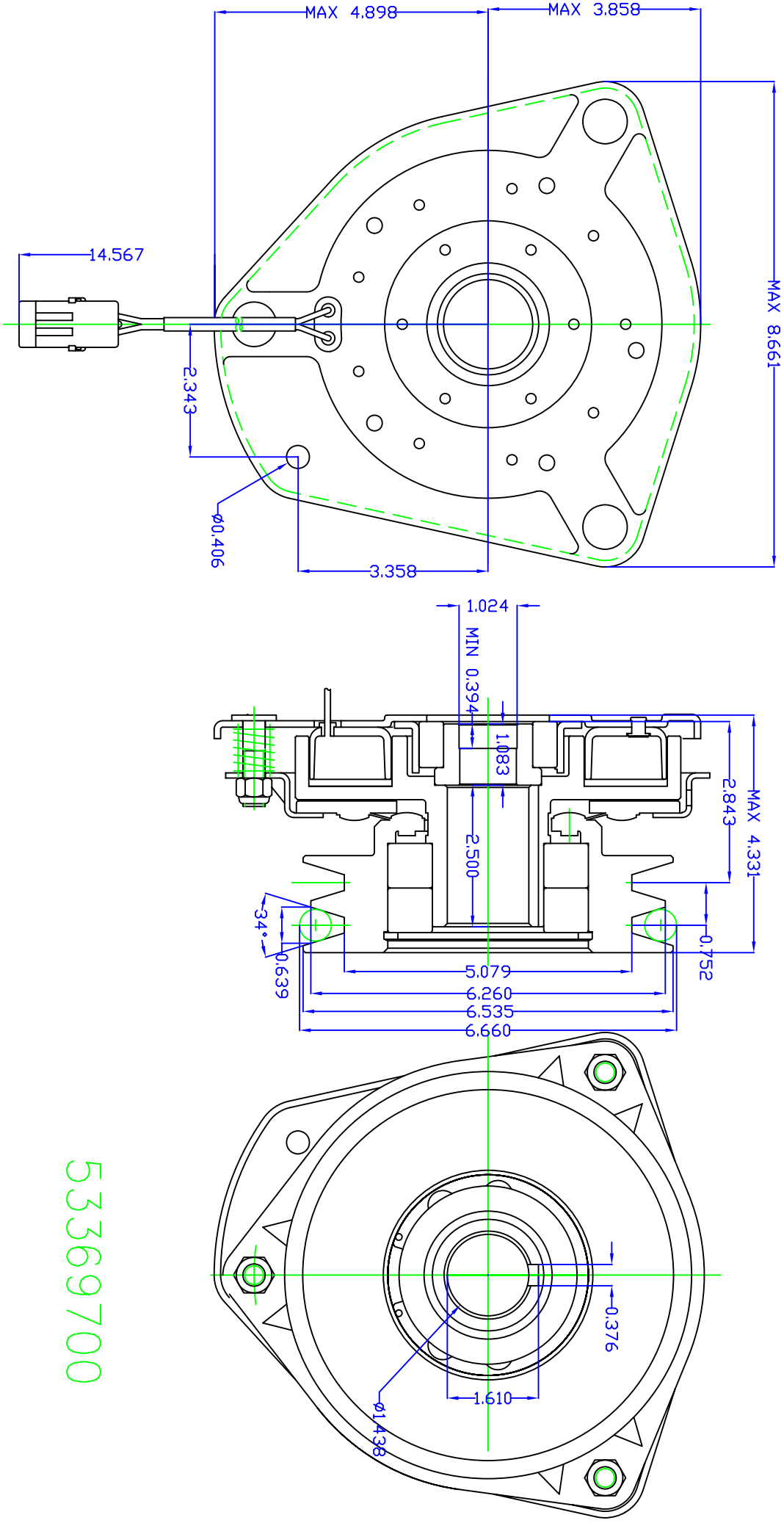
MAX 4.898
MAX 3.858
14.567
MAX 8.661
2.343
ø0.406
3.358
1.024
MIN 0.394
1.083
2.843
MAX 4.331
2.500
34°
0.639
0.752
5.079
6.260
6.535
6.660
0.376
1.610
ø1.438

533699700