REV	REVISION STATUS	NOTE	DATE	CHG BY	CHK BY
△					
△					
△					

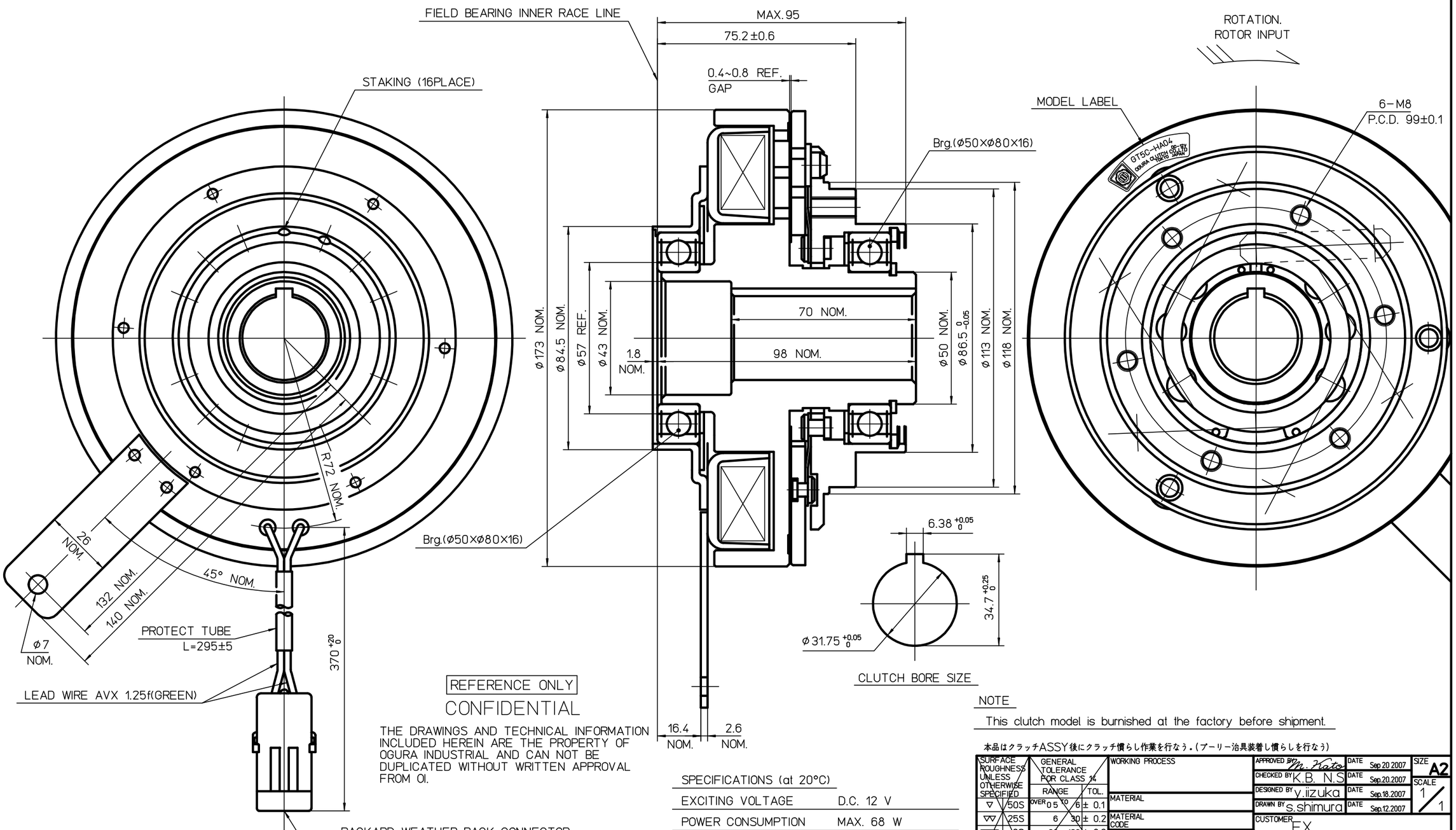

REFERENCE ONLY

CONFIDENTIAL

THE DRAWINGS AND TECHNICAL INFORMATION INCLUDED HEREIN ARE THE PROPERTY OF OGURA INDUSTRIAL AND CAN NOT BE DUPLICATED WITHOUT WRITTEN APPROVAL FROM OI.

	Friction surface
Field rotor assy	None-coated
Armature assy	Coated

PACKARD WEATHER PACK CONNECTOR
Connector and Connector Seal Assembly.....12010973
Terminals.....12124582
Cable Seals.....12015284

SPECIFICATIONS (at 20°C)

EXCITING VOLTAGE	D.C. 12 V
POWER CONSUMPTION	MAX. 68 W
STATIC TORQUE	
PREBURNISHED (at OGURA) MIN.	110 N·m
FINAL NOMINAL.	475 N·m

(COPPER COIL)

NOTE

This clutch model is burnished at the factory before shipment.

本品はクラッチASSY後にクラッチ慣らし作業を行なう。(プーリー治具装着し慣らしを行なう)

SURFACE ROUGHNESS UNLESS OTHERWISE SPECIFIED	GENERAL TOLERANCE FOR CLASS m	
	RANGE	TOL.
▽ 50S	OVER 0.5 TO 6	± 0.1
▽▽ 25S	6 30	± 0.2
▽▽▽ 6S	30 120	± 0.3
▽▽▽ 3S	120 315	± 0.5
▽▽▽▽ 0.8S	315 1000	± 0.8

HISTORY	53274700 00
ISSUE NO	
PLANT	2
ISSUE DATE	
WORKING PROCESS	
MATERIAL	
MATERIAL CODE	
MATERIAL SIZE	
HEAT TRTM	0
SURFACE TRTM	0
PARTS CODE	5913100000
OGURA CLUTCH Co.,LTD.	

APPROVED BY M. Kato	DATE Sep 20 2007	SIZE A2	
CHECKED BY K.B. N.S	DATE Sep.20.2007	SCALE 1/1	
DESIGNED BY y.iizuka	DATE Sep.18.2007		
DRAWN BY s.shimura	DATE Sep.12.2007		
CUSTOMER EX			
MODEL GT5C-HA04			
ASSY NO			
NAME MAGNETIC CLUTCH			
DWG NO 53274700 00			