REV	REVISION STATUS	NOTE	DATE	CHG BY	CHK BY
△					
△					
△					

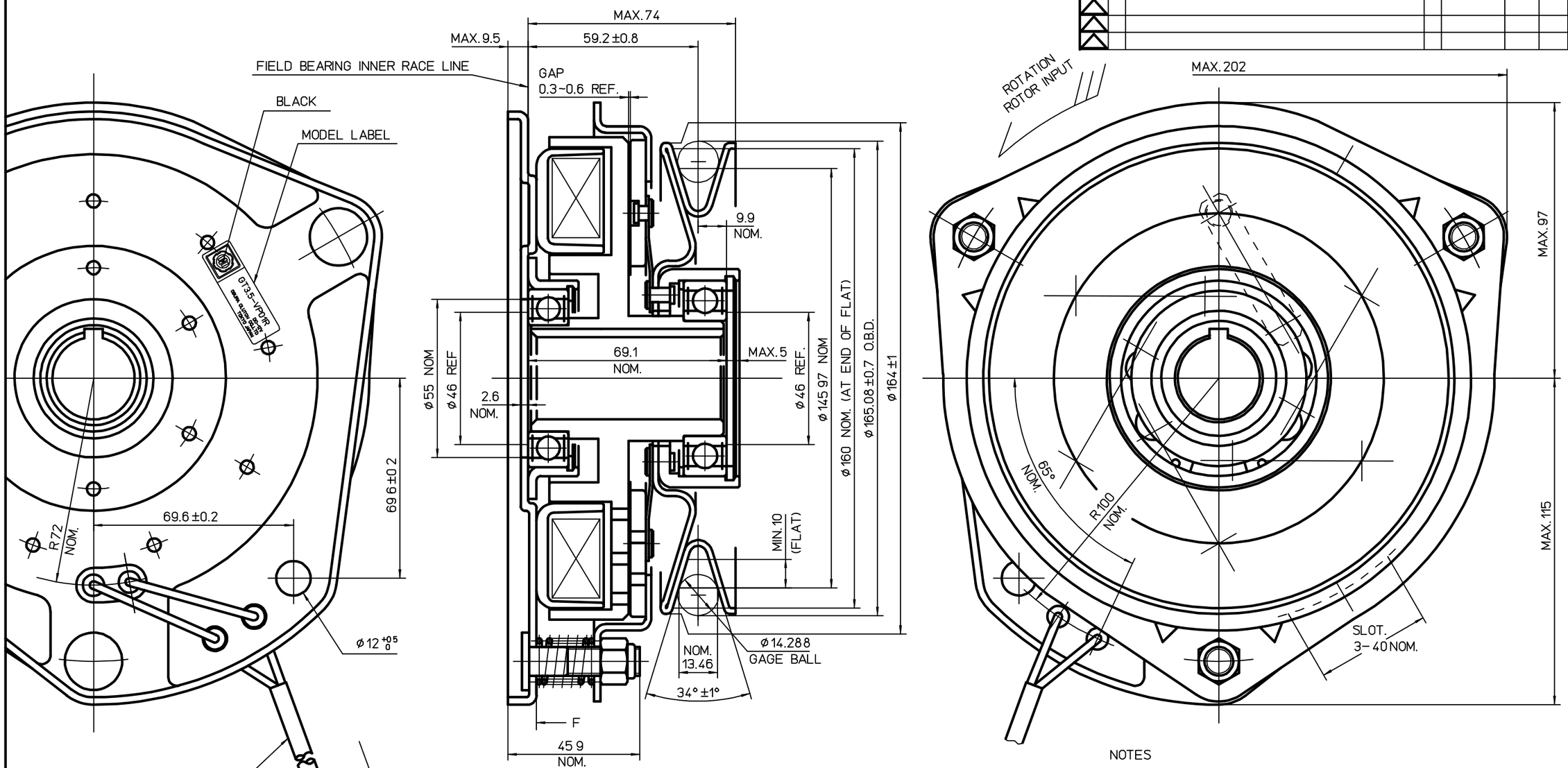

SPECIFICATIONS (at 20°C)	
EXCITING VOLTAGE	DC. 12 V
POWER CONSUMPTION	MAX. 68 W
STATIC CLUTCH TORQUE	
INITIAL MIN 98 N·m	
FINAL NOMINAL. 339 N·m	
STATIC BRAKE TORQUE	
INITIAL MIN. 1.8 N·m	
FINAL NOMINAL. 4.9 N·m	
MIN PULL IN VOLTAGE	DC. 8 V
	(COPPER COIL)

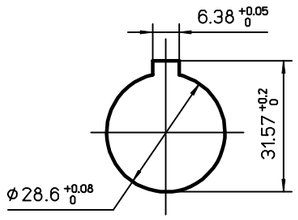

CLUTCH BORE SIZE

	Friction surface
Field rotor assy	None-coated
Armature assy	coated

NOTES

1. Airgaps must be adjusted when coilsprings and airgap adjustment nuts are incorporated into the clutch/brake at the assembly
2. Phosphate coating (Armature plate)

*本品はクラッチASSY後にクラッチ慣らし作業を行なうこと.

SURFACE ROUGHNESS UNLESS OTHERWISE SPECIFIED	GENERAL TOLERANCE FOR CLASS f4 RANGE	TOL.
▽ 50S	OVER 0.5 TO 6	± 0.1
▽▽ 25S	6 30	± 0.2
▽▽▽ 6S	30 120	± 0.3
▽▽▽▽ 3S	120 315	± 0.5
▽▽▽▽ 0.8S	315 1000	± 0.8

HISTORY	52838900 00
ISSUE NO	PLANT 2
ISSUE DATE	
WORKING PROCESS	
MATERIAL	
MATERIAL CODE	
MATERIAL SIZE	
HEAT TRTM	0
SURFACE TRTM	0
PARTS CODE	5913100000
	OGURA CLUTCH Co.,LTD.

APPROVED BY	E.M M.K	DATE	JJ.05.2005
CHECKED BY	R. Bussyone	DATE	JJ.04.2005
DESIGNED BY	N. Sugaki	DATE	JJ.04.2005
DRAWN BY	S.shimura	DATE	JJ.01.2005
SIZE	A2	SCALE	1/1
CUSTOMER	EX		
MODEL	GT3.5-VP01R		
ASSY NO			
NAME	MAGNETIC CLUTCH & BRAKE		
DWG NO	52838900 00		0