REV		REVISION STATUS		NOTE	DATE	CHG BY	CHK BY
01	1	Change lead wire (Black, 115, 180 was Blue, 200, 273) (3)	1	Immediately	Jun.17.05	S.S	K.B.

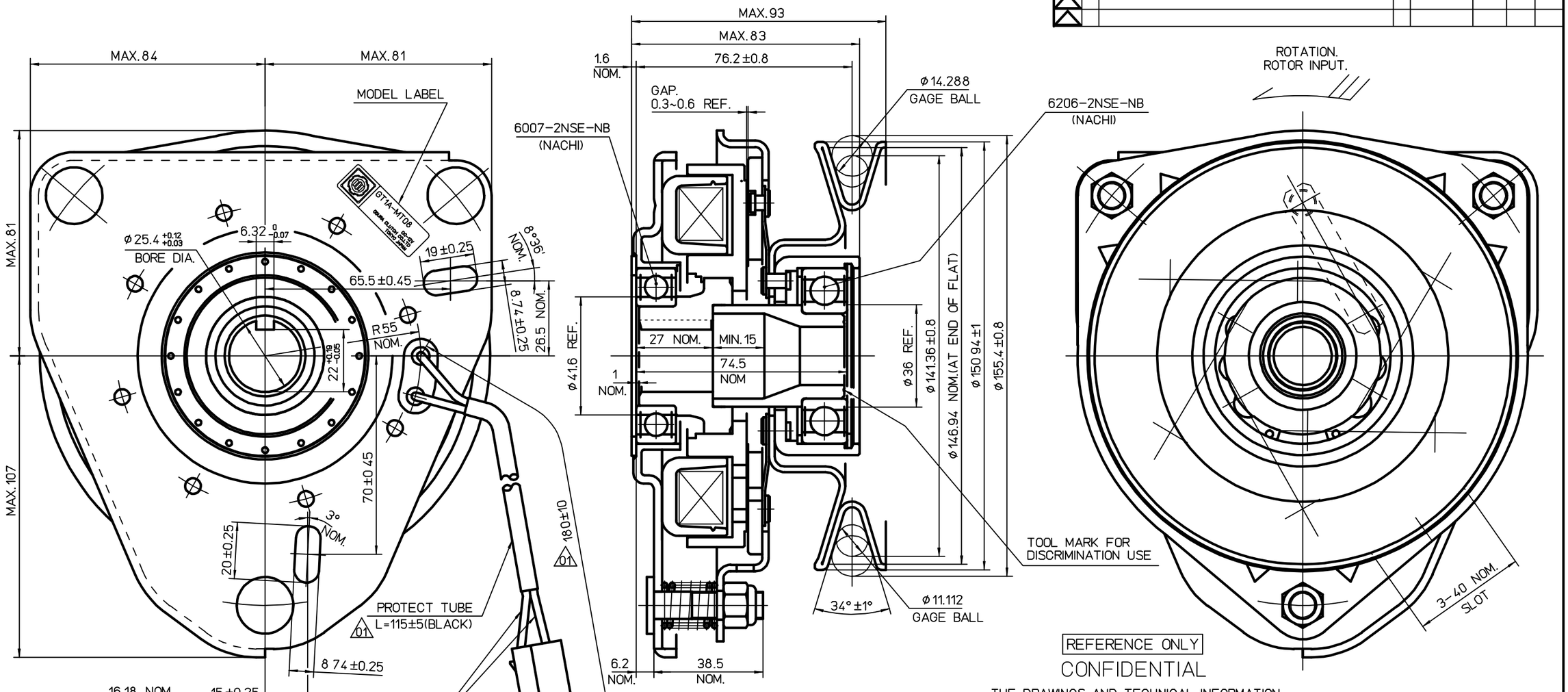

	Friction surface
Field rotor assy	None-coated
Armature assy	coated

SPECIFICATIONS (at 20°C)

EXCITING VOLTAGE	D.C. 12 V
CURRENT	3.96 A
RESISTANCE	3.03 ±5% OHM
POWER CONSUMPTION	MAX. 50 W
STATIC CLUTCH TORQUE	
INITIAL MIN. 35 N·m	
FINAL NOMINAL 118 N·m	
STATIC BRAKE TORQUE	
INITIAL MIN. 1.5 N·m	
FINAL NOMINAL 3 N·m	
MIN PULL IN VOLTAGE	D.C. 8 V

LEAF SPRING : THICKNESS t=1.0 (COPPER COIL)

REFERENCE ONLY

CONFIDENTIAL

THE DRAWINGS AND TECHNICAL INFORMATION INCLUDED HEREIN ARE THE PROPERTY OF OGURA INDUSTRIAL AND CAN NOT BE DUPLICATED WITHOUT WRITTEN APPROVAL FROM OI

NOTES

1. Airgaps must be adjusted when coilsprings and airgap adjustment nuts are incorporated into the clutch/brake at the assembly.

SURFACE ROUGHNESS UNLESS OTHERWISE SPECIFIED	GENERAL TOLERANCE FOR CLASS 1% RANGE	TOL.
▽ 50S	OVER 0.5 TO 6	± 0.1
▽▽ 25S	6 30	± 0.2
▽▽▽ 6S	30 120	± 0.3
▽▽▽▽ 3S	120 315	± 0.5
▽▽▽▽ 0.8S	315 1000	± 0.8

WORKING PROCESS	
MATERIAL	
MATERIAL CODE	
MATERIAL SIZE	
HEAT TRTM	0
SURFACE TRTM	0
PARTS CODE	5913100000
HISTORY	52831100 01
ISSUE NO	
PLANT	2
ISSUE DATE	

OGURA CLUTCH Co.LTD.

APPROVED BY E.M / M.K	DATE Jun.09.2005	SIZE	A2
CHECKED BY K. Bunajima	DATE Jun.08.2005		
DESIGNED BY K. Sugeki	DATE Jun.08.2005	SCALE	1/1
DRAWN BY S.shimura	DATE Jun.07.2005		
CUSTOMER EX			
MODEL GT1A-MT08			
ASSY NO			
NAME MAGNETIC CLUTCH & BRAKE			
DWG NO 52831100 01			2