REV		REVISION STATUS		NOTE		DATE	CHG BY	CHK BY
01	1	Add note.	(1)	1	Immediately	Mar.08.06	S.S	K.B.

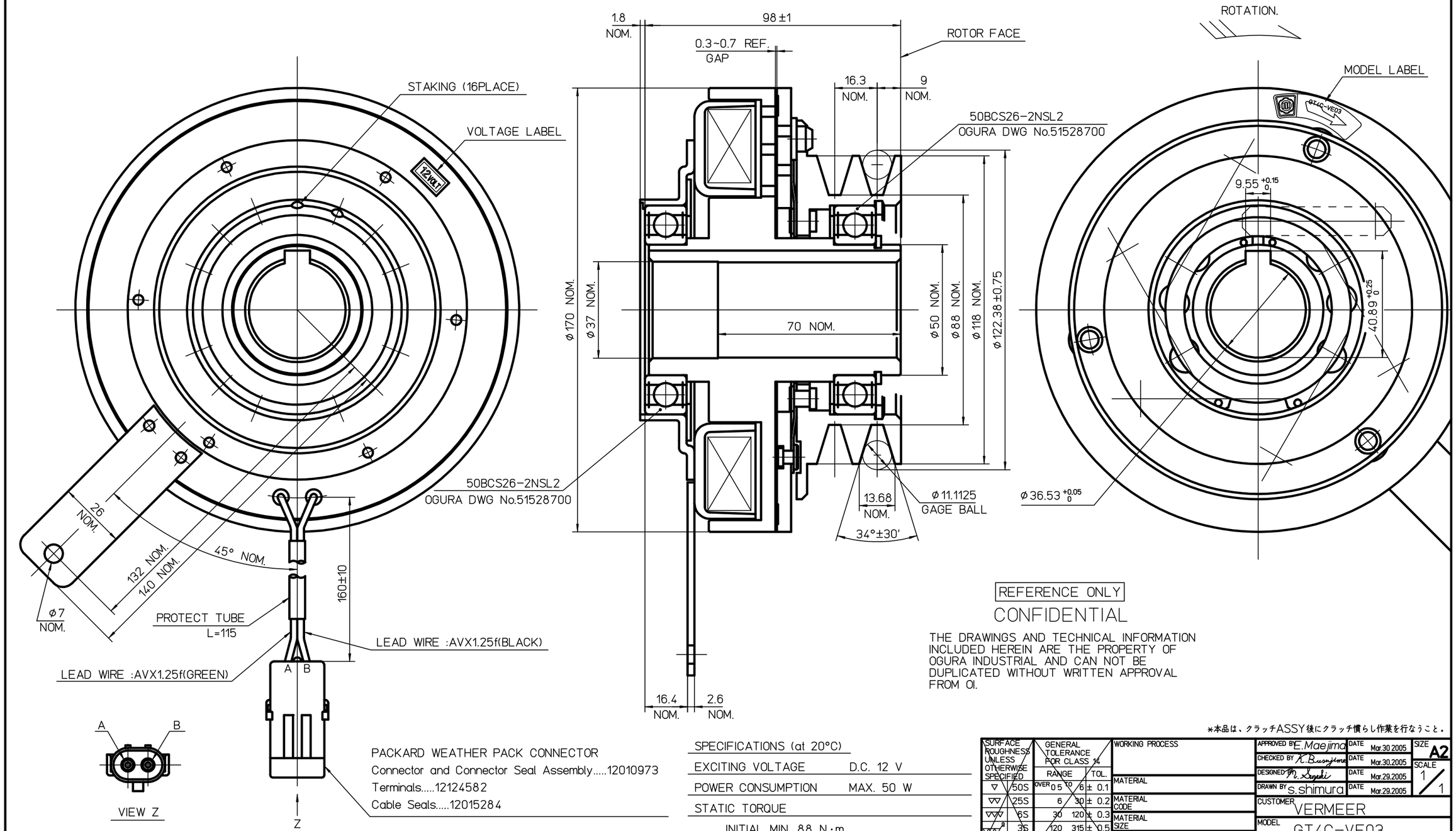

REFERENCE ONLY

CONFIDENTIAL

THE DRAWINGS AND TECHNICAL INFORMATION INCLUDED HEREIN ARE THE PROPERTY OF OGURA INDUSTRIAL AND CAN NOT BE DUPLICATED WITHOUT WRITTEN APPROVAL FROM OI.

SPECIFICATIONS (at 20°C)	
EXCITING VOLTAGE	D.C. 12 V
POWER CONSUMPTION	MAX. 50 W
STATIC TORQUE	
INITIAL MIN. 88 N·m	
01 PREBURNISHED (at OGURA) MIN. 190 N·m	
FINAL NOMINAL. 330 N·m	
	(COPPER COIL)

*本品は、クラッチASSY後にクラッチ慣らし作業を行なうこと。

SURFACE ROUGHNESS UNLESS OTHERWISE SPECIFIED		GENERAL TOLERANCE FOR CLASS 14 RANGE		TOL.
▽	50S	OVER 0.5	TO 6	± 0.1
▽▽	25S	6	30	± 0.2
▽▽▽	6S	30	120	± 0.3
▽▽▽ B	3S	120	315	± 0.5
▽▽▽▽	0.8S	315	1000	± 0.8

HISTORY	52808200 00
ISSUE NO	PLANT 2
ISSUE DATE	
WORKING PROCESS	
MATERIAL	
MATERIAL CODE	
MATERIAL SIZE	
HEAT TRTM	0
SURFACE TRTM	0
PARTS CODE	5913100000
OGURA CLUTCH Co.,LTD.	

APPROVED BY E.Maejima	DATE Mar.30.2005	SIZE A2	
CHECKED BY K.Bunjima	DATE Mar.30.2005	SCALE 1/1	
DESIGNED BY K.Sugaki	DATE Mar.29.2005		
DRAWN BY S.shimura	DATE Mar.29.2005		
CUSTOMER VERMEER			
MODEL GT4C-VE03			
ASSY NO			
NAME MAGNETIC CLUTCH			
DWG NO 52808200 01			