REV		REVISION STATUS		NOTE		DATE	CHG BY	CHK BY
01	2	Change lead wire (AVX was AEX) and bush	(2)	1	Immediately	Nov.18.04	S.S	K.B.
02	1	AMP、420、360 was PACKARD、317.5、260. etc	(7)	2	Next assemble	Jan16.06	S.S	K.B

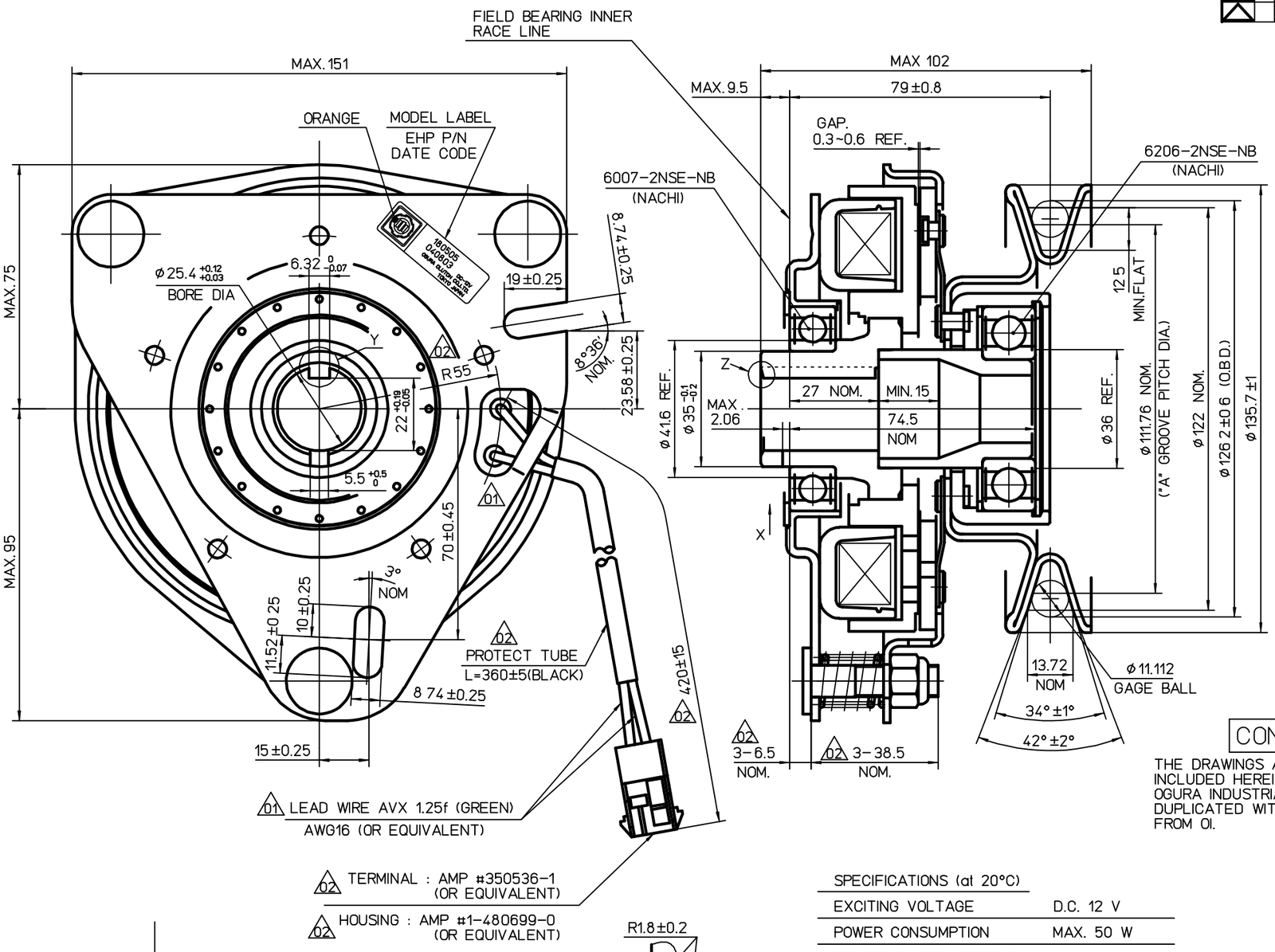

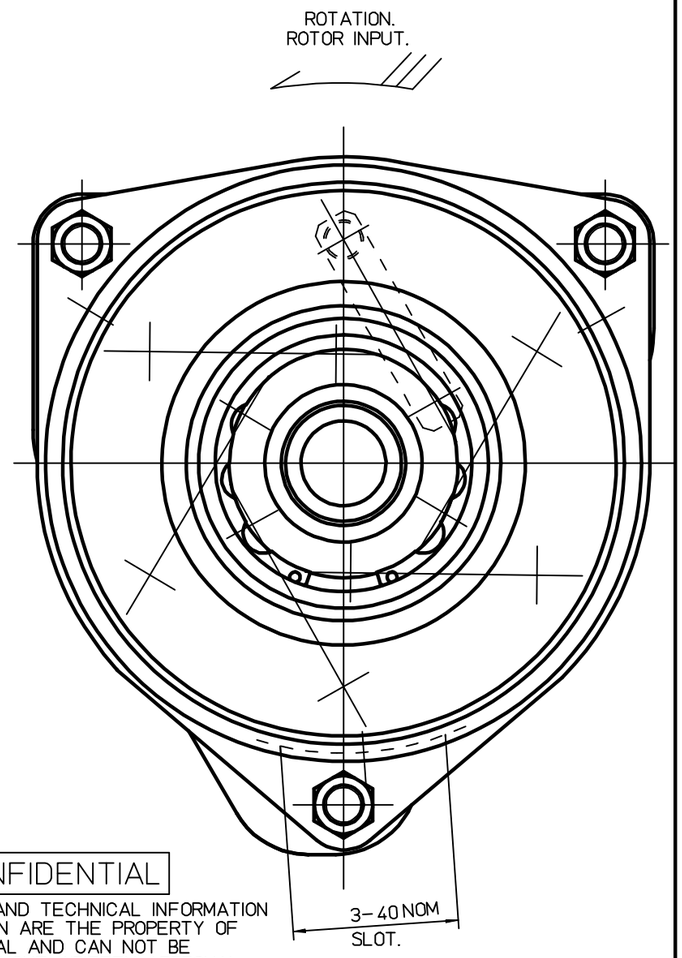

CONFIDENTIAL

THE DRAWINGS AND TECHNICAL INFORMATION INCLUDED HEREIN ARE THE PROPERTY OF OGURA INDUSTRIAL AND CAN NOT BE DUPLICATED WITHOUT WRITTEN APPROVAL FROM OI.

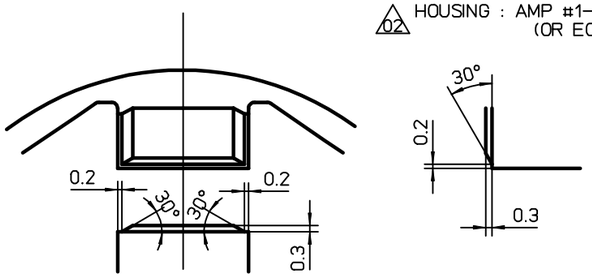

Y AND Z DETAIL(REFERNCE ONLY)

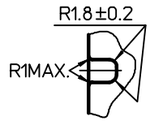

VIEW X

	Friction surface
Field rotor assy	None-coated
Armature assy	Coated

SPECIFICATIONS (at 20°C)	
EXCITING VOLTAGE	D.C. 12 V
POWER CONSUMPTION	MAX. 50 W
STATIC CLUTCH TORQUE	
INITIAL MIN. 35 Nm	
AFTER BURNISHING MIN. 118 Nm	
STATIC BRAKE TORQUE	
INITIAL MIN. 1.5 Nm	
AFTER BURNISHING MIN. 3 Nm	
MIN PULL IN VOLTAGE	D.C. 8 V

LEAF SPRING : THICKNESS t=1.0 (COPPER COIL)

NOTES

1. Airgaps must be adjusted when coilsprings and airgap adjustment nuts are incorporated into the clutch/brake at the assembly

E.H.P. CRD MODEL PART No.180505

SURFACE ROUGHNESS UNLESS OTHERWISE SPECIFIED	GENERAL TOLERANCE FOR CLASS 14 RANGE	TOL.
▽ 50S	OVER 0.5 TO 6	± 0.1
▽▽ 25S	6 30	± 0.2
▽▽▽ 6S	30 120	± 0.3
▽▽▽▽ 3S	120 315	± 0.5
▽▽▽▽ 0.8S	315 1000	± 0.8

HISTORY	52751400 02
ISSUE NO	PLANT 2
ISSUE DATE	
WORKING PROCESS	
MATERIAL	
MATERIAL CODE	
MATERIAL SIZE	
HEAT TRTM	0
SURFACE TRTM	0
PARTS CODE	5913100000
OGURA CLUTCH Co.LTD.	

APPROVED BY E.Maejima	DATE Aug.08.2004	SIZE	A2
CHECKED BY K.Bunajima	DATE Aug.05.2004	SCALE	1/1
DESIGNED BY M.Sugeki	DATE Aug.05.2004		
DRAWN BY S.shimura	DATE Aug.03.2004		
CUSTOMER	E.H.P.		
MODEL	GT1-EH13V		
ASSY NO			
NAME	MAGNETIC CLUTCH & BRAKE		
DWG NO	52751400 02		1