REV	REVISION STATUS	NOTE	DATE	CHG BY	CHK BY
△					
△					
△					

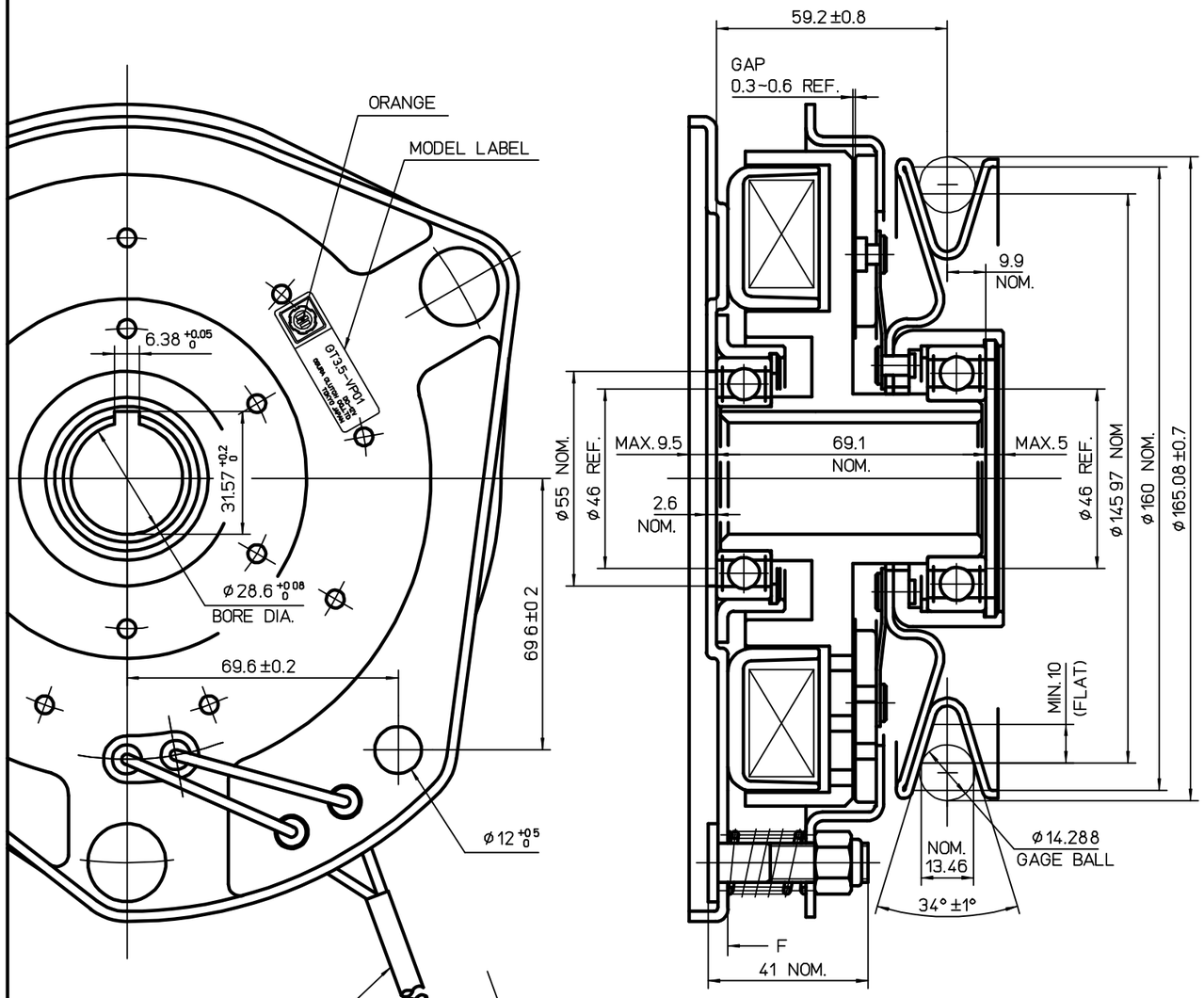

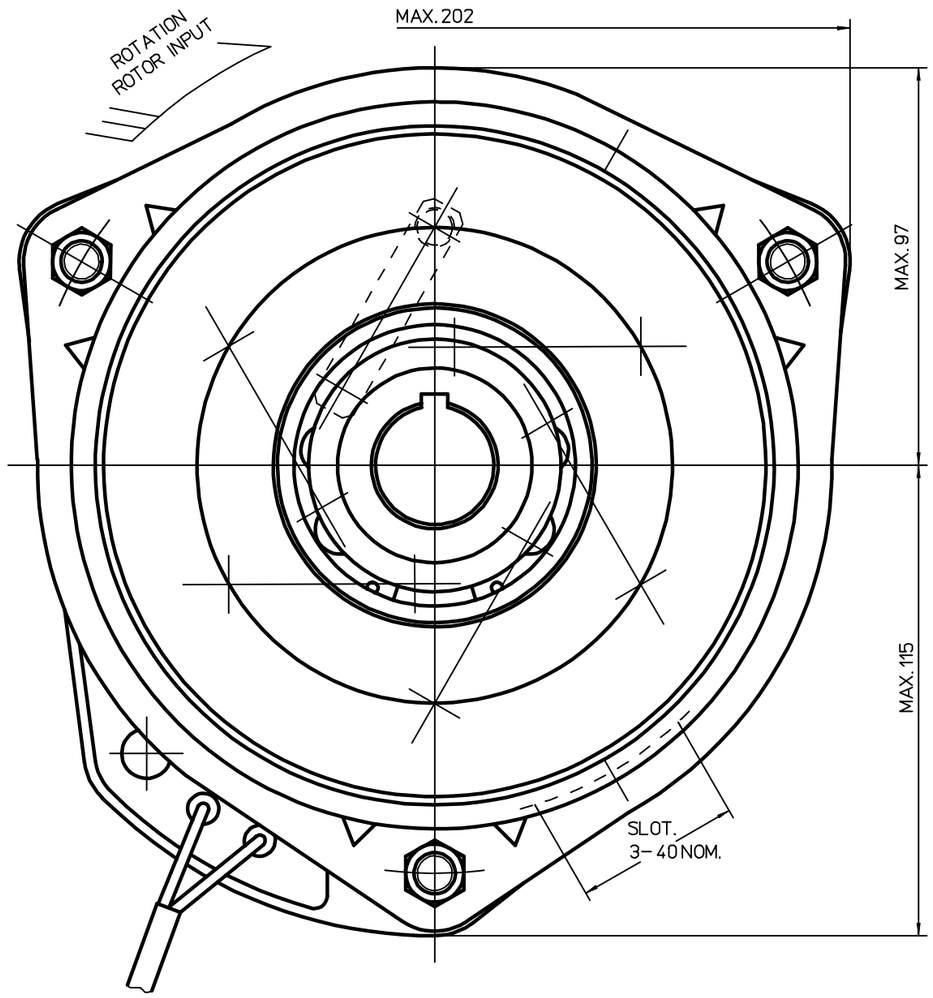

PROTECT TUBE(ESG-3)
L=200 +20 0 (WHITE)

LEAD WIRE: AVX1.25f (GREEN)

290 +20 0 (TO FACE "F")

PACKARD ELECTRIC ("56" SERIES)
2-CONTACT LOCK-TYPE
CONNECTOR . PART No.2973781
TERMINALS : PART No.2965142

SPECIFICATIONS	
EXCITING VOLTAGE	DC. 12 V
POWER CONSUMPTION	MAX. 68 W
STATIC CLUTCH TORQUE	
INITIAL MIN. 98 N·m	
FINAL NOMINAL. 339 N·m	
STATIC BRAKE TORQUE	
INITIAL MIN. 1.8 N·m	
FINAL NOMINAL. 4.9 N·m	
MIN PULL IN VOLTAGE	DC. 8 V
	(COPPER COIL)

NOTES

1. Airgaps must be adjusted when coilsprings and airgap adjustment nuts are incorporated into the clutch/brake at the assembly.
2. Phosphate coating (Armature plate)

SURFACE ROUGHNESS UNLESS OTHERWISE SPECIFIED	GENERAL TOLERANCE FOR CLASS 1% RANGE	TOL.
▽ 50S	OVER 0.5 TO 6	± 0.1
▽▽ 25S	6 30	± 0.2
▽▽▽ 6S	30 120	± 0.3
▽▽▽ a 3S	120 315	± 0.5
▽▽▽▽ 0.8S	315 1000	± 0.8

HISTORY	52698600 00
ISSUE NO	PLANT 2
ISSUE DATE	
WORKING PROCESS	
MATERIAL	
MATERIAL CODE	
MATERIAL SIZE	
HEAT TRTM	0
SURFACE TRTM	0
PARTS CODE	5913100000
OGURA CLUTCH Co.,LTD.	

APPROVED BY E.Maejima	DATE Feb 26.2004	SIZE	A2
CHECKED BY A.Busuyama	DATE Feb 26.2004	SCALE	1/1
DESIGNED BY N.Sugaki	DATE Feb.25.2004		
DRAWN BY S.shimura	DATE Feb.16.2004		
CUSTOMER EX			
MODEL GT3.5-VP01			
ASSY NO			
NAME MAGNETIC CLUTCH & BRAKE			
DWG NO 52698600 00			