CONFIDENTIAL

THE DRAWINGS AND TECHNICAL INFORMATION INCLUDED HEREIN ARE THE PROPERTY OF OGURA INDUSTRIAL AND CAN NOT BE DUPLICATED WITHOUT WRITTEN APPROVAL FROM OIC.

REV		REVISION STATUS		NOTE		DATE	CHG BY	CHK BY
01	1	Change surface treatment. Change form. Add notes. etc.	(9)	2	Next assemble	Apr.03.08	S.S	N.S.
02	5	Change leaf spring.	(1)	2	Next assemble	Jan.11.11	N.S	Y.T.

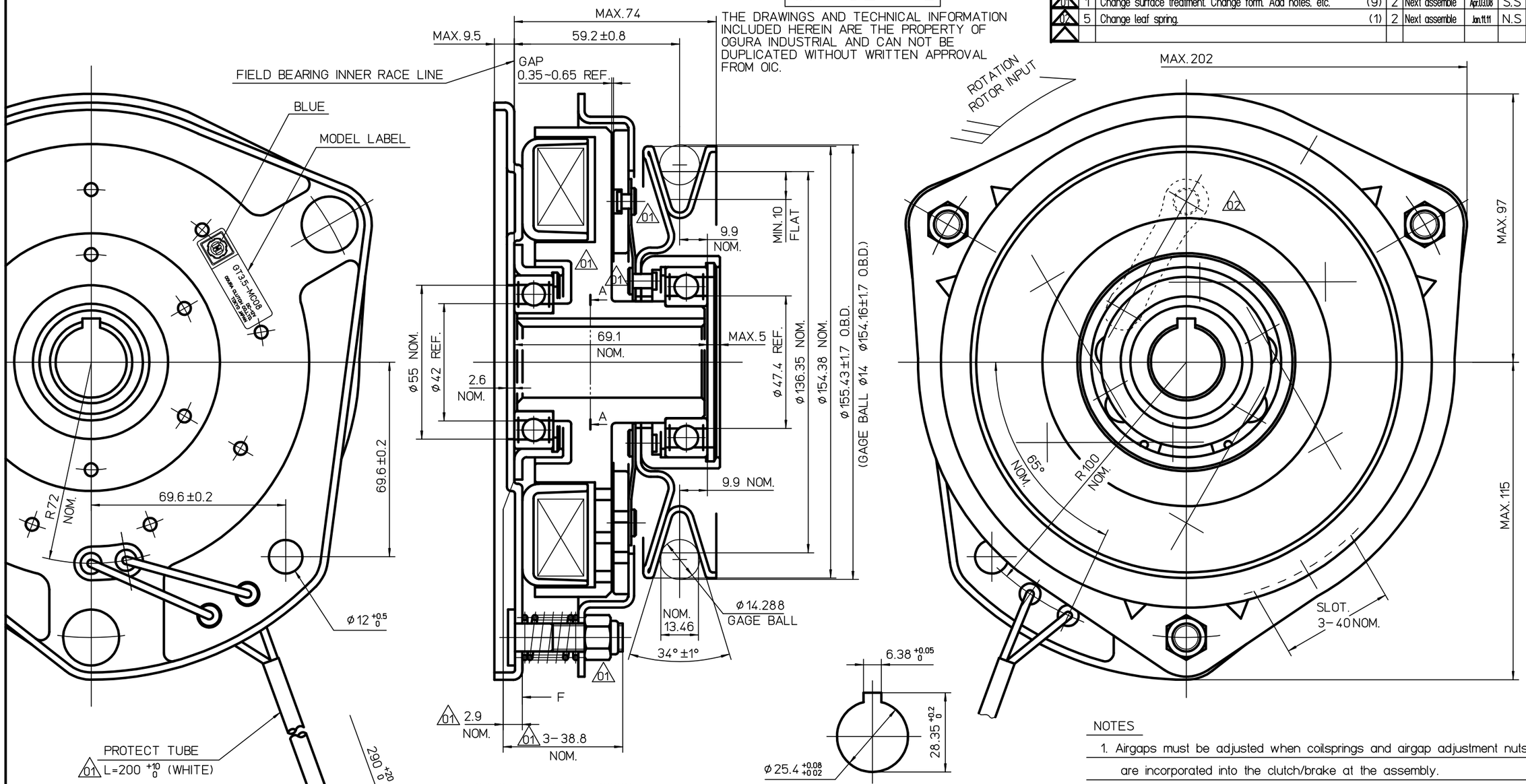

SPECIFICATIONS (at 20°C)

EXCITING VOLTAGE	D.C. 12 V
POWER CONSUMPTION	MAX. 68 W
STATIC CLUTCH TORQUE	
01 PREBURNISHED MIN. 98 N·m (at OGURA)	
FINAL NOMINAL. 339 N·m	
STATIC BRAKE TORQUE	
INITIAL MIN. 1.8 N·m	
FINAL NOMINAL. 4.9 N·m	
MIN PULL IN VOLTAGE	D.C. 8 V

(COPPER COIL)

	Friction surface
Field rotor assy	None-coated
Armature assy	Coated

NOTES

1. Airgaps must be adjusted when coilsprings and airgap adjustment nuts are incorporated into the clutch/brake at the assembly.
2. Phosphate coating (Armature plate)
3. 01 This clutch model is burnished at the factory before shipment.

*本品はクラッチASSY後にクラッチ慣らし作業を行なうこと。

SURFACE ROUGHNESS UNLESS OTHERWISE SPECIFIED	GENERAL TOLERANCE FOR CLASS 14	WORKING PROCESS	
▽ 50S	OVER 0.5 TO 6 ± 0.1	MATERIAL	
▽▽ 25S	6 30 ± 0.2	MATERIAL CODE	
▽▽▽ 6S	30 120 ± 0.3	MATERIAL SIZE	
▽▽▽ 3S	120 315 ± 0.5	HEAT TRTM	0
▽▽▽▽ 0.8S	315 1000 ± 0.8	SURFACE TRTM	0
HISTORY	52663800 02	PARTS CODE	5913100000
ISSUE NO	PLANT 2	OGURA CLUTCH Co.,LTD.	
ISSUE DATE			

APPROVED BY E.Maejima	DATE Oct.06.2003	SIZE	A2
CHECKED BY K.Bunajima	DATE Oct.06.2003	SCALE	1/1
DESIGNED BY Y.Sugaki	DATE Oct.06.2003		
DRAWN BY S.shimura	DATE Oct.06.2003		
CUSTOMER EX			
MODEL GT3.5-MC08			
ASSY NO			
NAME MAGNETIC CLUTCH & BRAKE			
DWG NO 52663800 02			