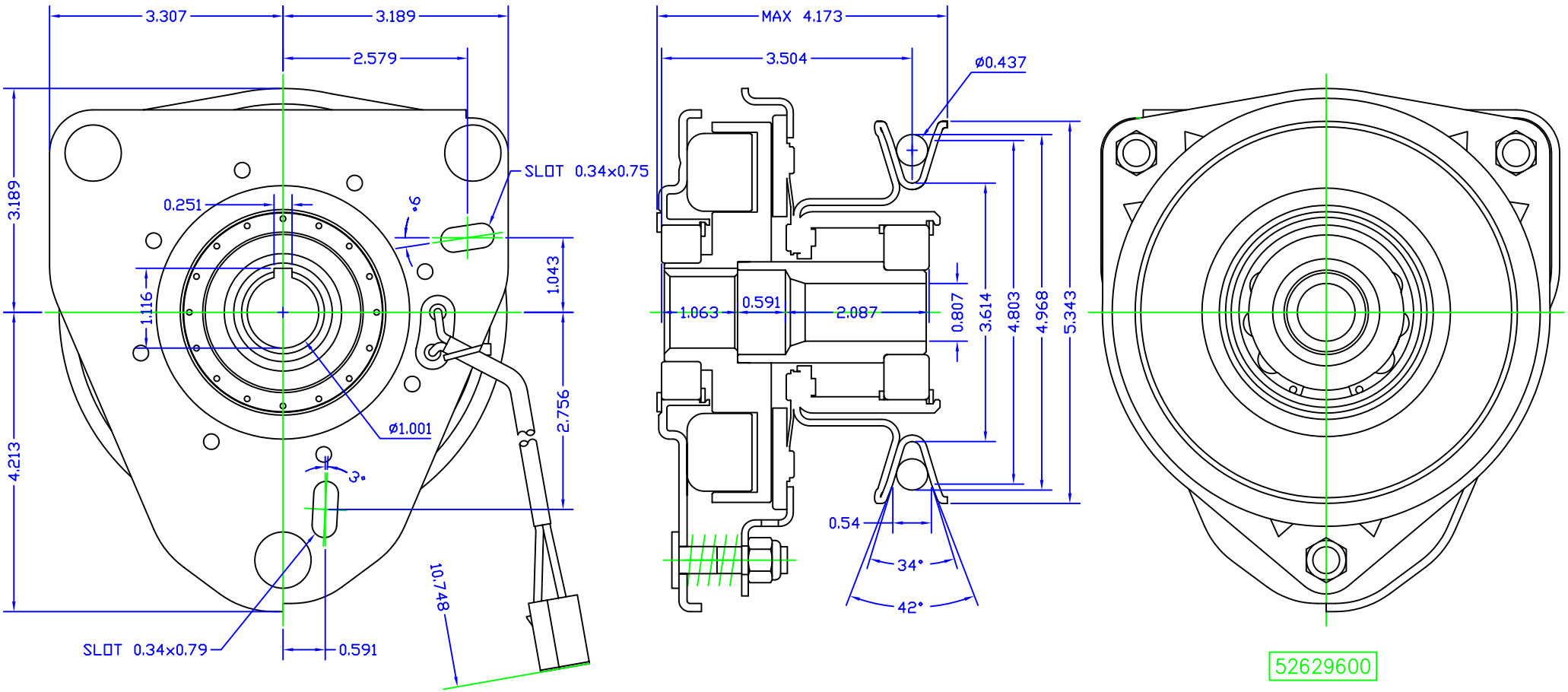
3.307
3.189
2.579
3.189
0.251
1.116
SLOT 0.34x0.75
9°
1.043
2.756
ø1.001
4.213
3°
10.748
SLOT 0.34x0.79
0.591
MAX 4.173
3.504
ø0.437
1.063
0.591
2.087
0.807
3.614
4.803
4.968
5.343
0.54
34°
42°
52629600