REV		REVISION STATUS		NOTE		DATE	CHG BY	CHK BY
01	1	Add band clip.	(1)	1	Immediately	Jul.15.03	S.S	K.B

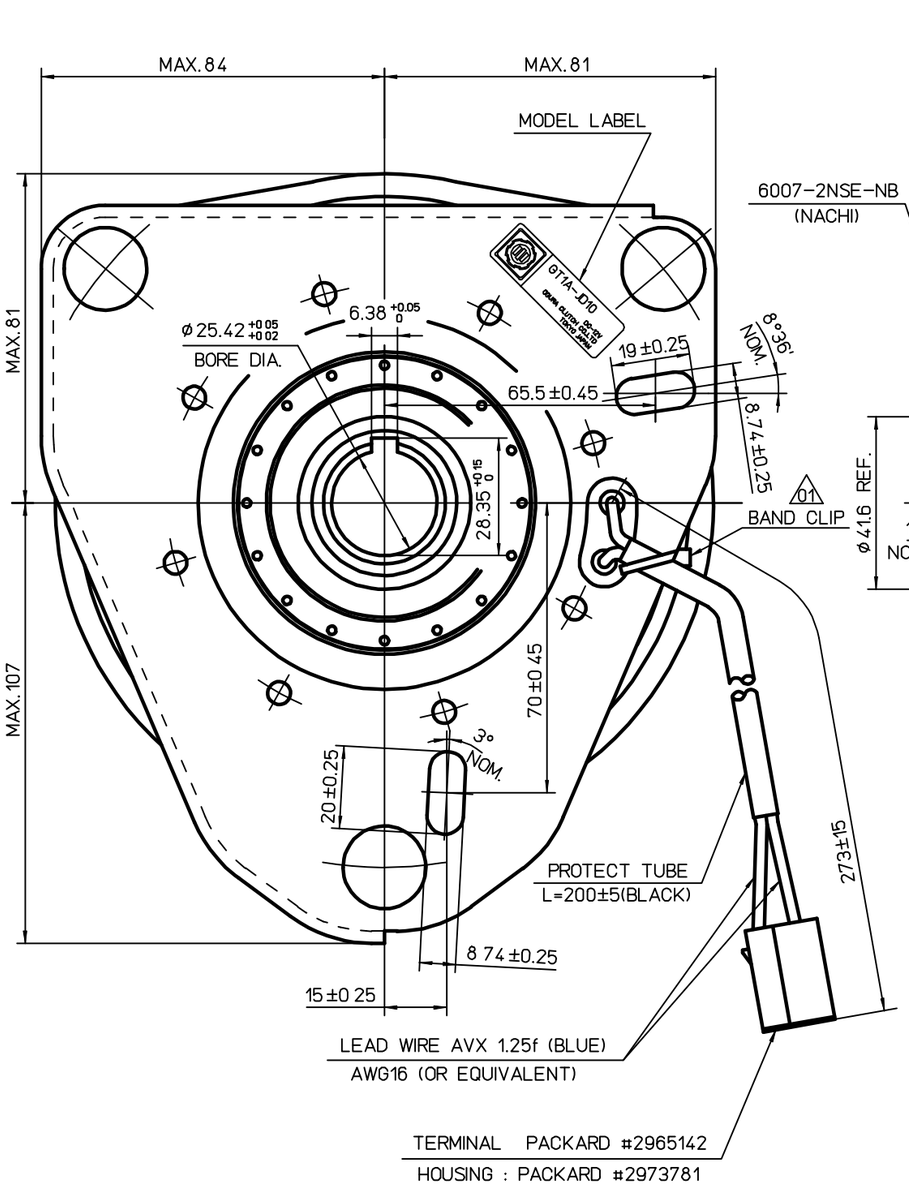

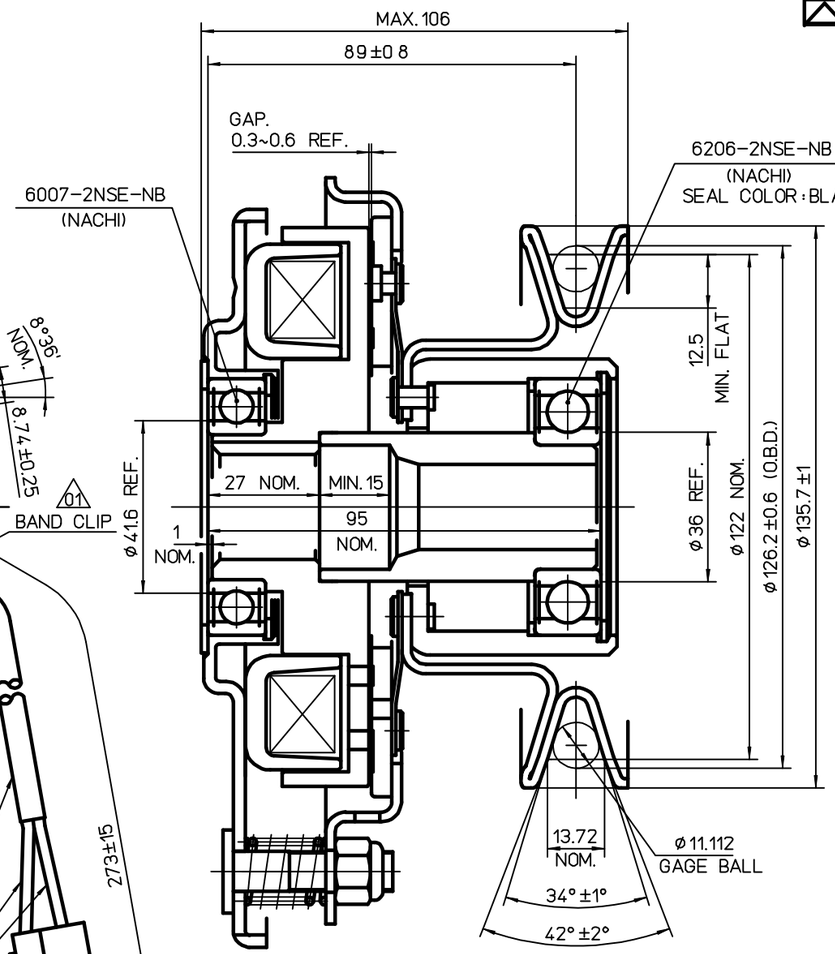

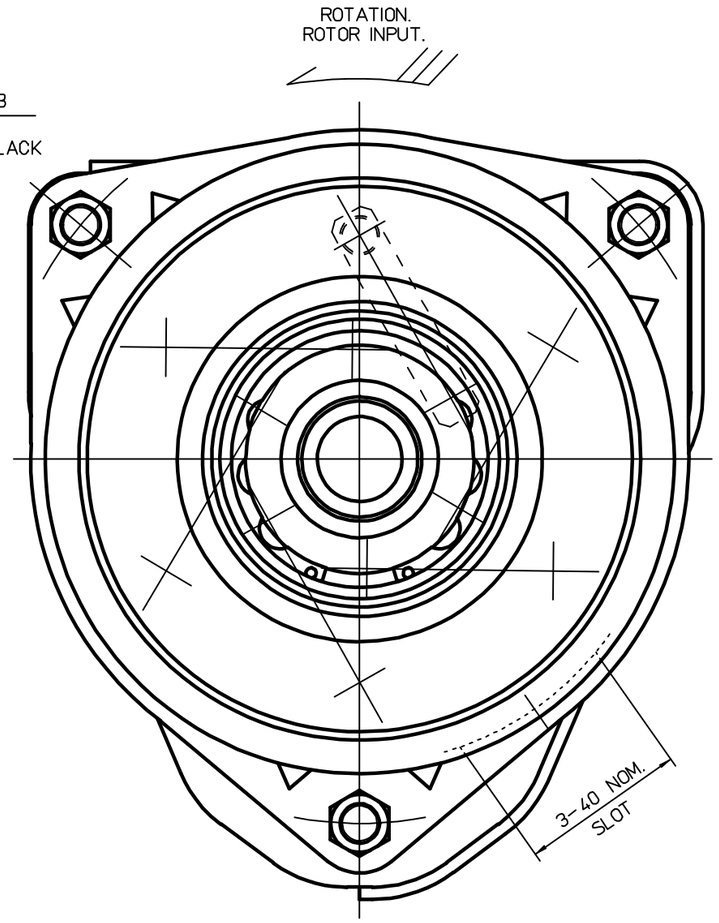

SPECIFICATIONS	
EXCITING VOLTAGE	D C 12 V
POWER CONSUMPTION	MAX. 50 W
STATIC CLUTCH TORQUE	
INITIAL MIN. 35 N·m	
AFTER BURNISHING MIN. 118 N·m	
STATIC BRAKE TORQUE	
INITIAL MIN. 1.5 N·m	
AFTER BURNISHING MIN. 3 N·m	
MIN PULL IN VOLTAGE	D.C. 8 V

LEAF SPRING : THICKNESS t=1.0 (COPPER COIL)

NOTES

1. Airgaps must be adjusted when coilsprings and airgap adjustment nuts are incorporated into the clutch/brake at the assembly

SURFACE ROUGHNESS UNLESS OTHERWISE SPECIFIED	GENERAL TOLERANCE FOR CLASS f4		
	RANGE		TOL.
▽ 50S	OVER 0.5	TO 6	± 0.1
▽▽ 25S	6	30	± 0.2
▽▽▽ 6S	30	120	± 0.3
▽▽▽ 3S	120	315	± 0.5
▽▽▽▽ 0.8S	315	1000	± 0.8

HISTORY	52629600 01
ISSUE NO	PLANT 2
ISSUE DATE	
WORKING PROCESS	
MATERIAL	
MATERIAL CODE	
MATERIAL SIZE	
HEAT TRTM	0
SURFACE TRTM	0
PARTS CODE	5913100000
OGURA CLUTCH Co.,LTD.	

APPROVED BY E.Maejima	DATE May.30 2003	SIZE A2	
CHECKED BY K.Bunojima	DATE May.30 2003	SCALE 1/1	
DESIGNED BY R.Sugeki	DATE May.30.2003		
DRAWN BY S.shimura	DATE May.28.2003		
CUSTOMER J. DEERE			
MODEL GT1A-JD10			
ASSY NO			
NAME MAGNETIC CLUTCH & BRAKE			
DWG NO 52629600 01		0	