REV	REVISION STATUS	NOTE	DATE	CHG BY	CHK BY
△					
△					
△					

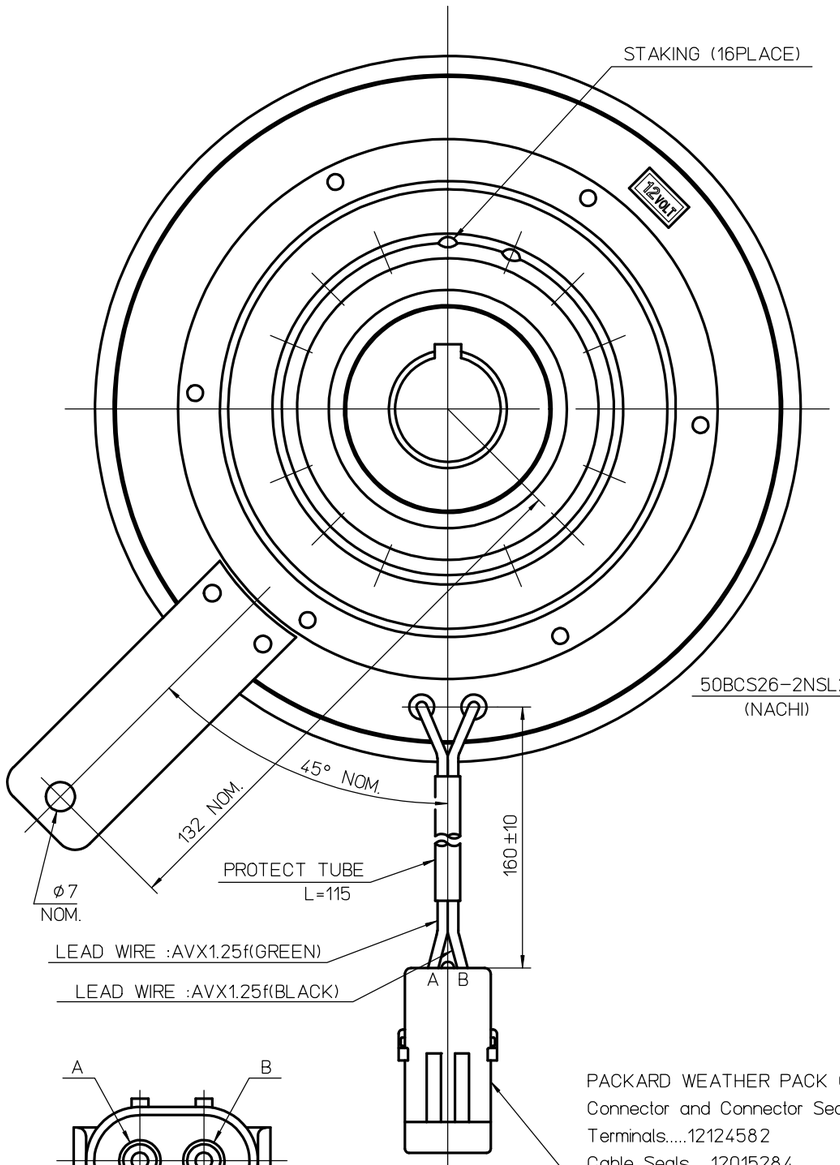

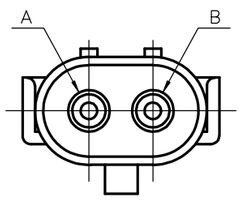

VIEW Z

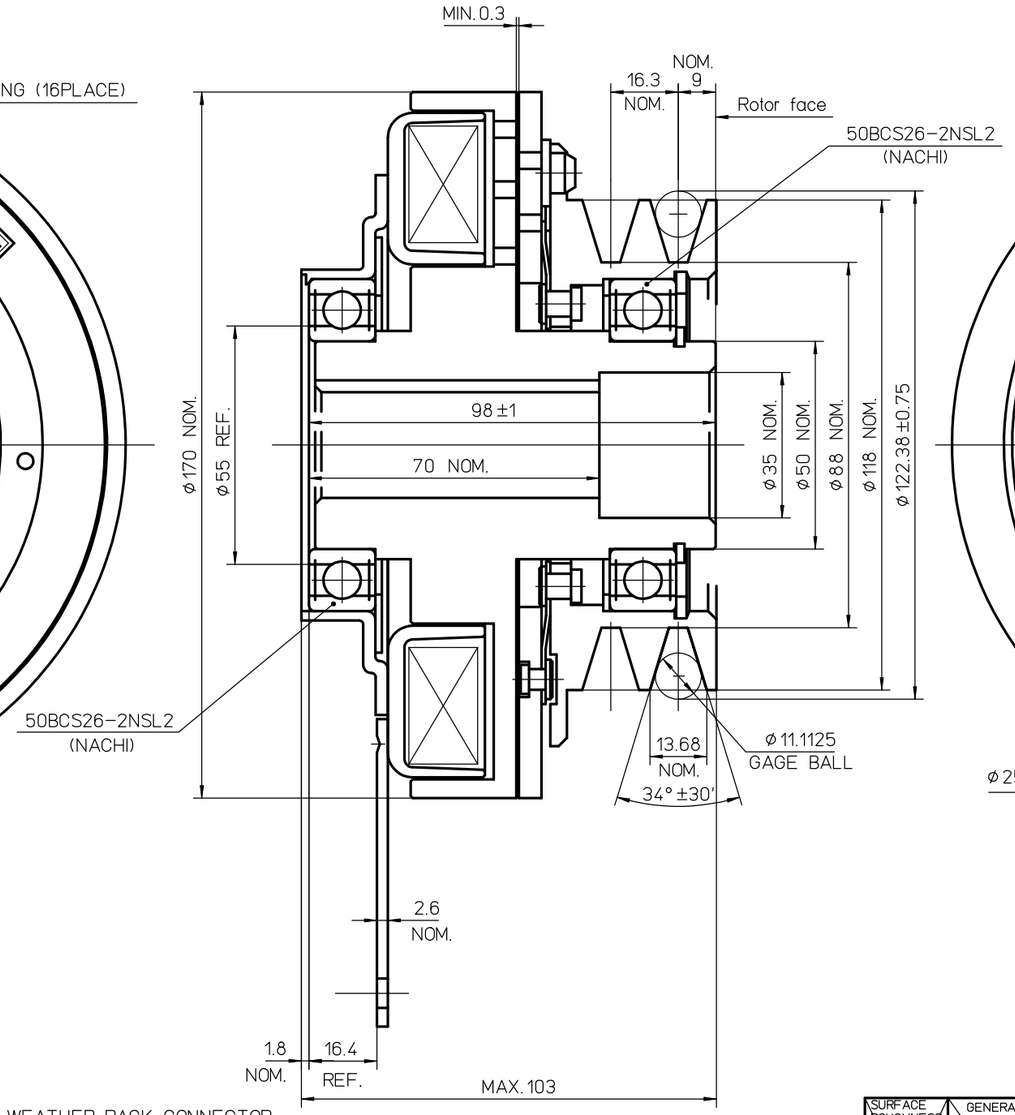

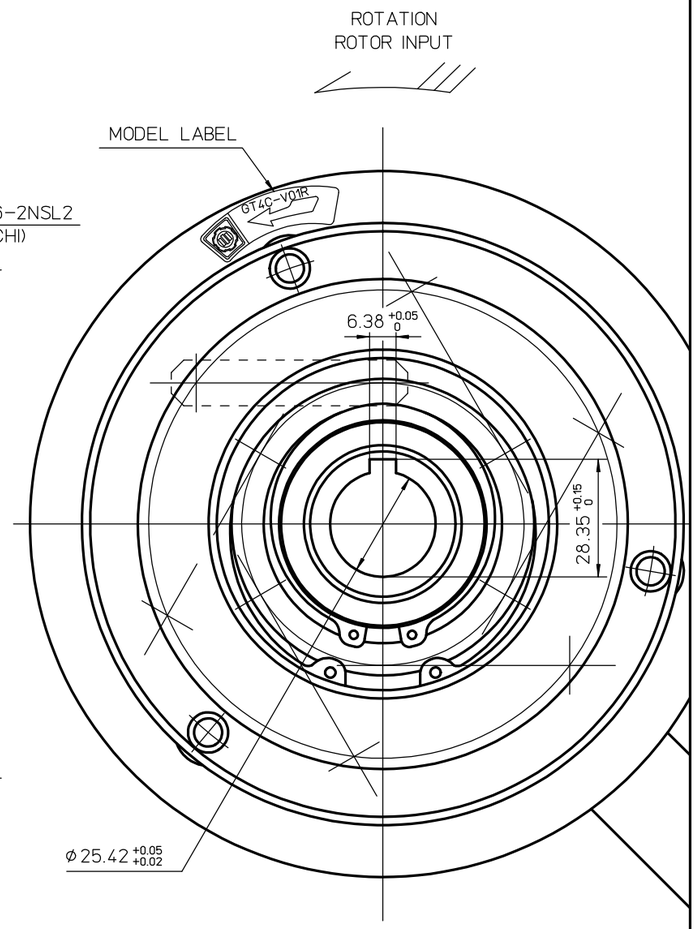

PACKARD WEATHER PACK CONNECTOR
Connector and Connector Seal Assembly.....12010973
Terminals.....12124582
Cable Seals.....12015284

SPECIFICATIONS

EXCITING VOLTAGE	D.C. 12 V
POWER CONSUMPTION	MAX. 50 W
STATIC TORQUE	
INITIAL MIN. 80 N·m	
AFTER BURNISHING MIN. 300 N·m	
(COPPER COIL)	

NOTES

1. Friction surface treatment : (Rotor)
   Coating treatment (Black)

注記

1. ローター摩擦面コーティング処理(黒)

SURFACE ROUGHNESS UNLESS OTHERWISE SPECIFIED		GENERAL TOLERANCE FOR CLASS f4 RANGE (OVER / TO)	TOL.
▽	50S	0.5 / 6	± 0.1
▽▽	25S	6 / 30	± 0.2
▽▽▽	6S	30 / 120	± 0.3
▽▽▽ a	3S	120 / 315	± 0.5
▽▽▽▽	0.8S	315 / 1000	± 0.8

HISTORY	52612600 △00
ISSUE NO	PLANT 2
ISSUE DATE	
WORKING PROCESS	
MATERIAL	
MATERIAL CODE	
MATERIAL SIZE	
HEAT TRTM	0
SURFACE TRTM	0
PARTS CODE	5913100000
	OGURA CLUTCH Co.,LTD.

APPROVED BY		DATE	SIZE A2
CHECKED BY		DATE	SCALE 1/1
DESIGNED BY		DATE	
DRAWN BY	s.shimura	DATE Apr.09.2003	
CUSTOMER	EX		
MODEL	GT4C-V01R		
ASSY NO			
NAME	MAGNETIC CLUTCH		
DWG NO	52612600 △00		