REV		REVISION STATUS		NOTE		DATE	CHG BY	CHK BY
01	2	Change pins P/N	(1)	4	Be executed	Mar.28.03	S.S	K.B

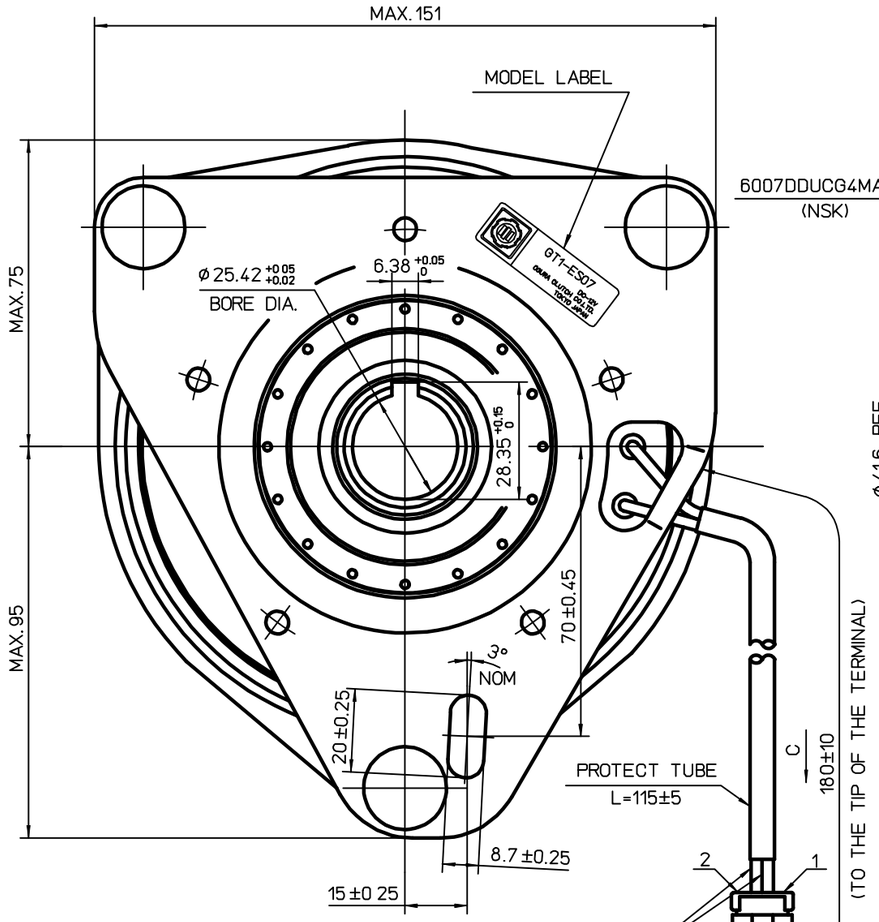

DEUTSCH

2WAY RECEPTACLE : DT04-2P-E005

01 PINS : 1060-16-0122

SECONDARY LOCK : W2P

VIEW C

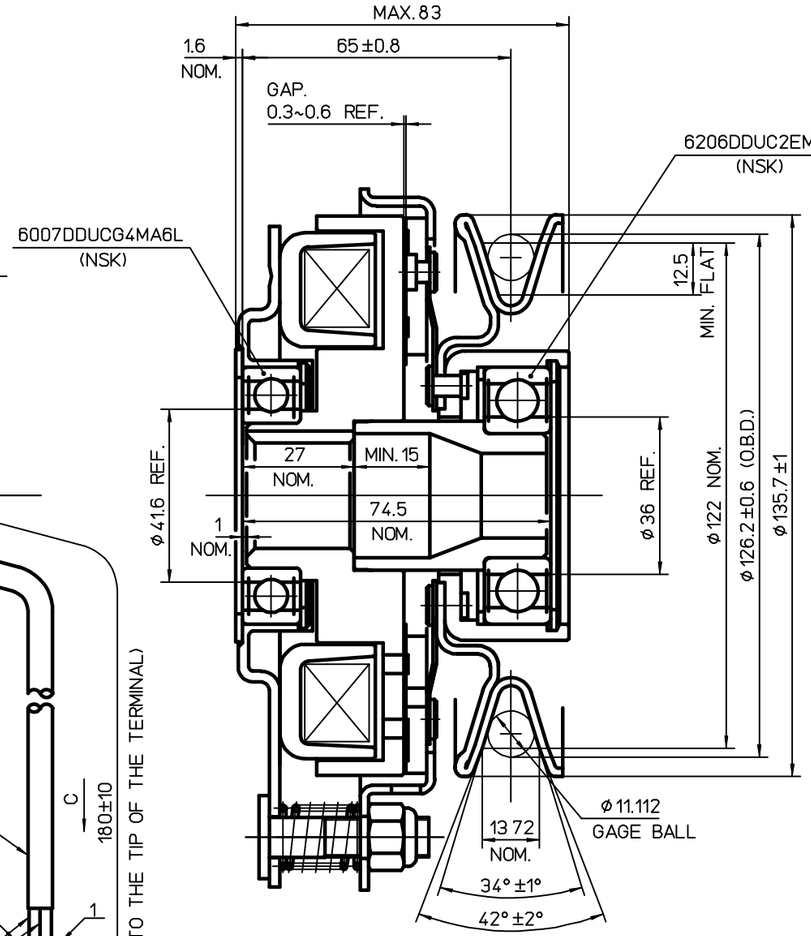

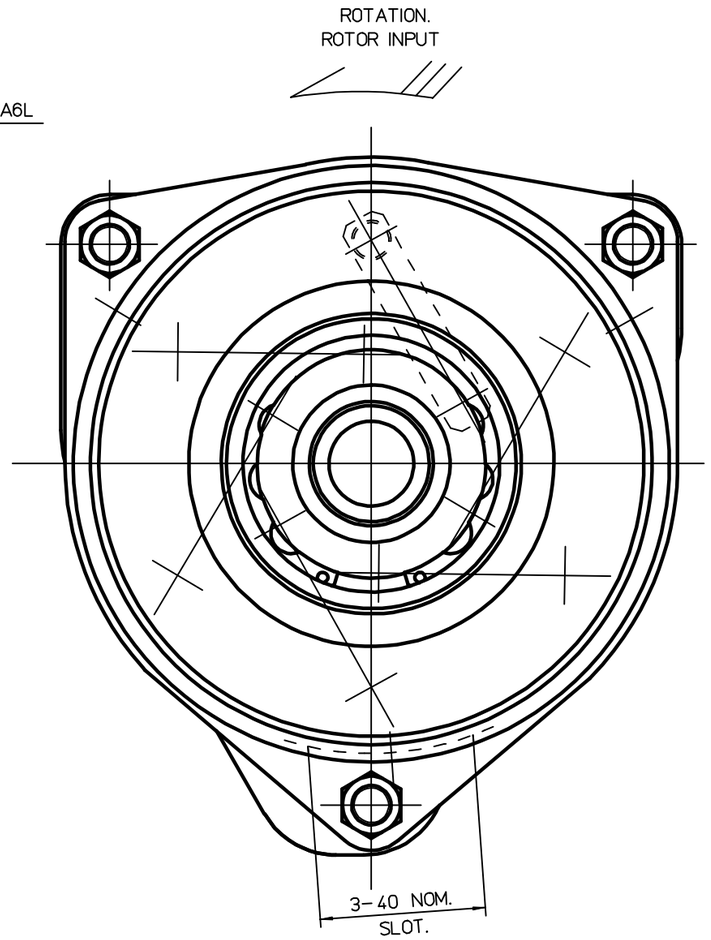

SPECIFICATIONS		
EXCITING VOLTAGE		D.C. 12 V
POWER CONSUMPTION		MAX. 50 W
STATIC TORQUE		
CLUTCH	INITIAL	MIN. 30 Nm
	AFTER BURNISHING	MIN. 100 Nm
BRAKE	INITIAL	MIN. 1.5 Nm
	AFTER BURNISHING	MIN. 3 Nm
MIN PULLIN VOLTAGE		D.C. 8 V

(COPPER COIL)

NOTES

1. Airgaps must be adjusted when coilsprings and airgap adjustment nuts are incorporated into the clutch/brake at the assembly.

ETESIA

SURFACE ROUGHNESS UNLESS OTHERWISE SPECIFIED	
▽	50S
▽▽	25S
▽▽▽	6S
▽▽▽▽	3S
▽▽▽▽	0.8S

GENERAL TOLERANCE FOR CLASS M		
RANGE		TOL.
OVER 0.5	TO 6	± 0.1
6	30	± 0.2
30	120	± 0.3
120	315	± 0.5
315	1000	± 0.8

HISTORY	52605000 00
ISSUE NO	PLANT 2
ISSUE DATE	
WORKING PROCESS	
MATERIAL	
MATERIAL CODE	
MATERIAL SIZE	
HEAT TRTM	0
SURFACE TRTM	0
PARTS CODE	5913100000
	OGURA CLUTCH Co.,LTD.

APPROVED BY E.Maejima	DATE Mar 18 2003	SIZE A2	
CHECKED BY K.Bunnjeme	DATE Mar 18 2003	SCALE 1/1	
DESIGNED BY R.Sugaki	DATE Mar.17.2003		
DRAWN BY S.shimura	DATE Mar.13.2003		
CUSTOMER EX			
MODEL GT1-ES07			
ASSY NO			
NAME MAGNETIC CLUTCH & BRAKE			
DWG NO 52605000 01			0

REFERENCE ONLY

CONFIDENTIAL

THE DRAWINGS AND TECHNICAL INFORMATION INCLUDED HEREIN ARE THE PROPERTY OF OGURA INDUSTRIAL AND CAN NOT BE DUPLICATED WITHOUT WRITTEN APPROVAL FROM OI