REV		REVISION STATUS		NOTE		DATE	CHG BY	CHK BY
01	6	Change snap ring.	(1)	2	Next assemble	Sep.19.03	S.S	K.B.

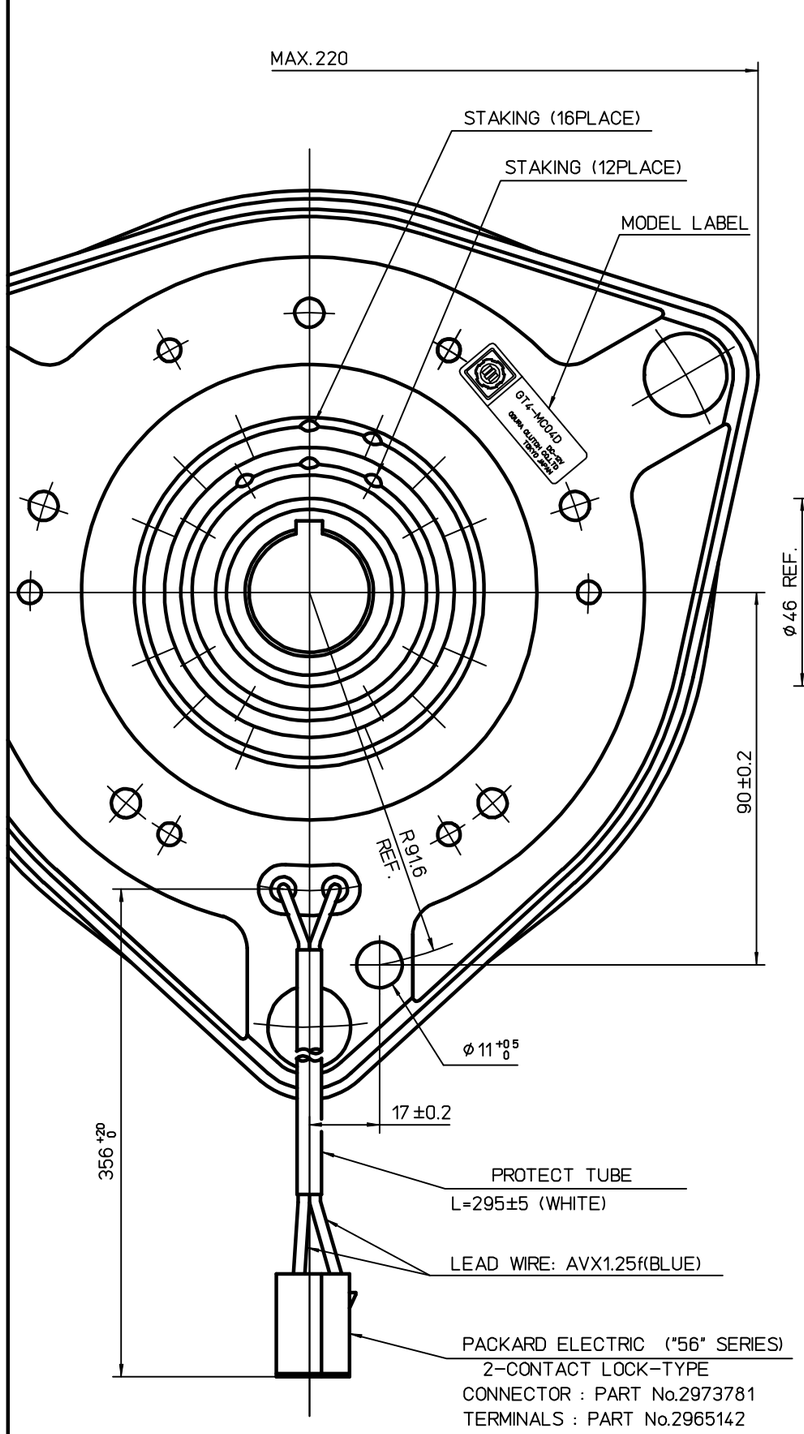

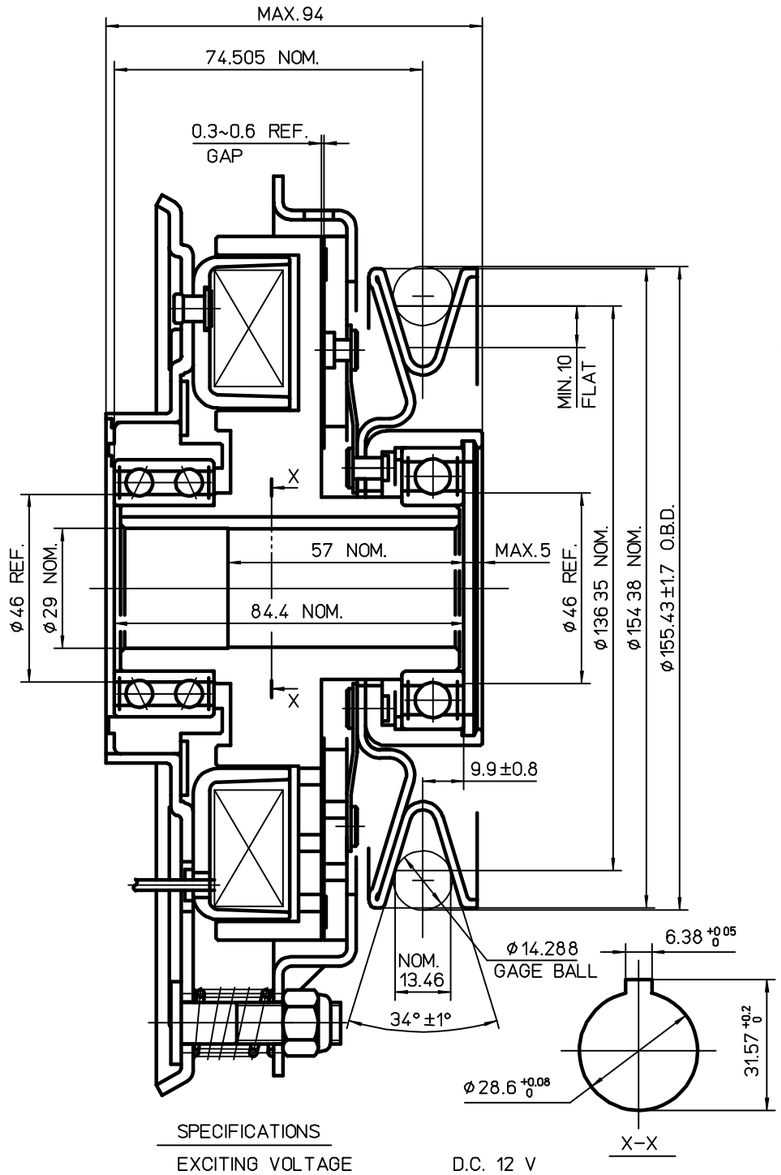

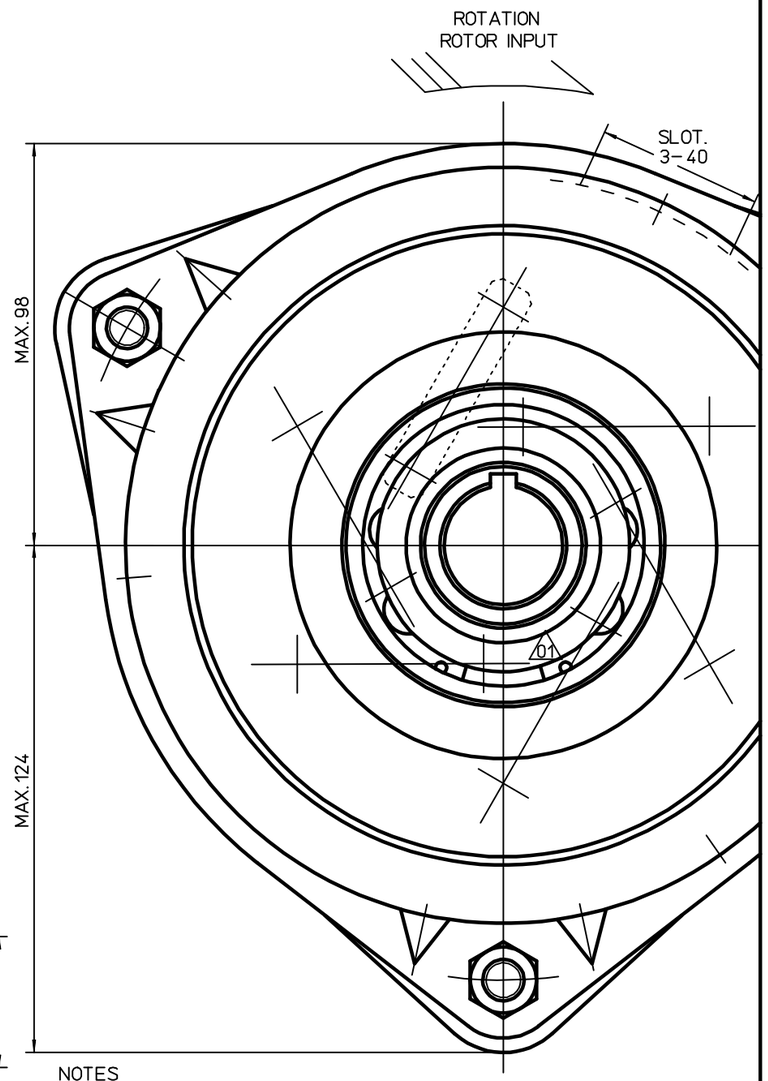

SPECIFICATIONS	
EXCITING VOLTAGE	D.C. 12 V
POWER CONSUMPTION	MAX. 68 W
STATIC CLUTCH TORQUE	
INITIAL MIN. 98 Nm	
AFTER BURNISHING MIN. 271 Nm	
STATIC BRAKE TORQUE	
INITIAL MIN. 2 Nm	
AFTER BURNISHING MIN. 10 Nm	
MIN PULL IN VOLTAGE	D.C. 8 V
	(COPPER COIL)

NOTES

1. Airgaps must be adjusted when coilsprings and airgap adjustment nuts are incorporated into the clutch/brake at the assembly.
2. Phosphate coating (Armature plate)

DIESEL ENGINE TYPE

SURFACE ROUGHNESS UNLESS OTHERWISE SPECIFIED	GENERAL TOLERANCE FOR CLASS m		
	RANGE		TOL.
50S	OVER 0.5	TO 6	± 0.1
25S	6	30	± 0.2
6S	30	120	± 0.3
3S	120	315	± 0.5
0.8S	315	1000	± 0.8

HISTORY 52545600 01

ISSUE NO | PLANT 2

ISSUE DATE

WORKING PROCESS

MATERIAL

MATERIAL CODE

MATERIAL SIZE

HEAT TRTM 0

SURFACE TRTM 0

PARTS CODE 5913100000

OGURA CLUTCH Co.,LTD.

APPROVED BY R. Bunojima	DATE Sep.10 2002	SIZE A2	
CHECKED BY R. Bunojima	DATE Sep.10 2002	SCALE 1/1	
DESIGNED BY R. Sugaki	DATE Sep.09.2002		
DRAWN BY S.shimura	DATE Sep.06.2002		
CUSTOMER METALCRAFT			
MODEL GT4-MC04D			
ASSY NO			
NAME MAGNETIC CLUTCH & BRAKE			
DWG NO 52545600 01		0	