REV	REVISION STATUS	NOTE	DATE	CHG BY	CHK BY
△					
△					
△					

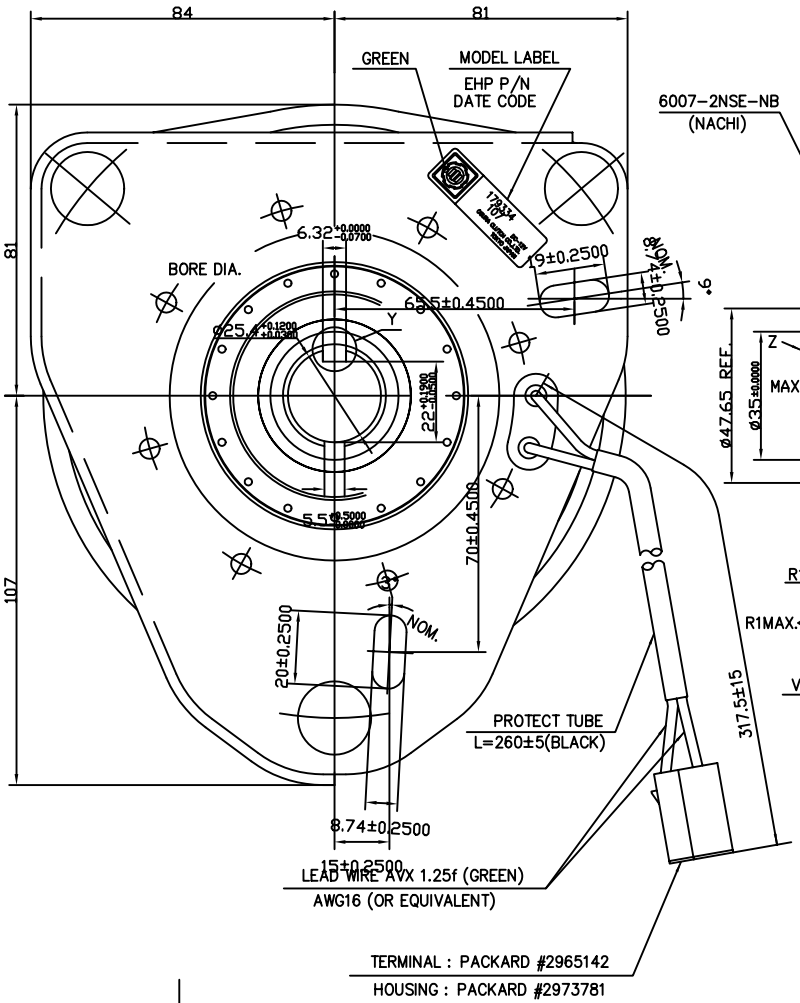

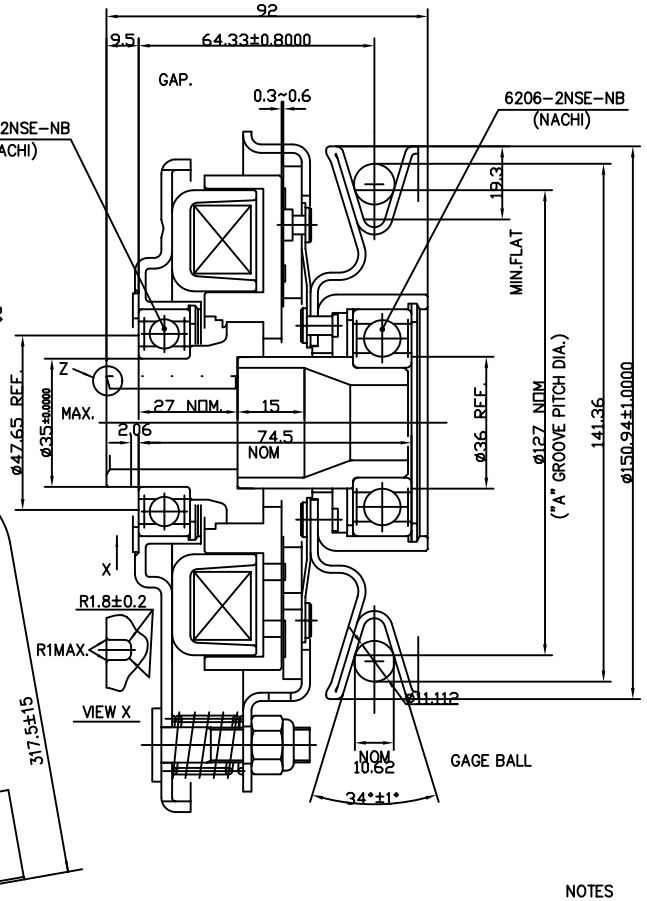

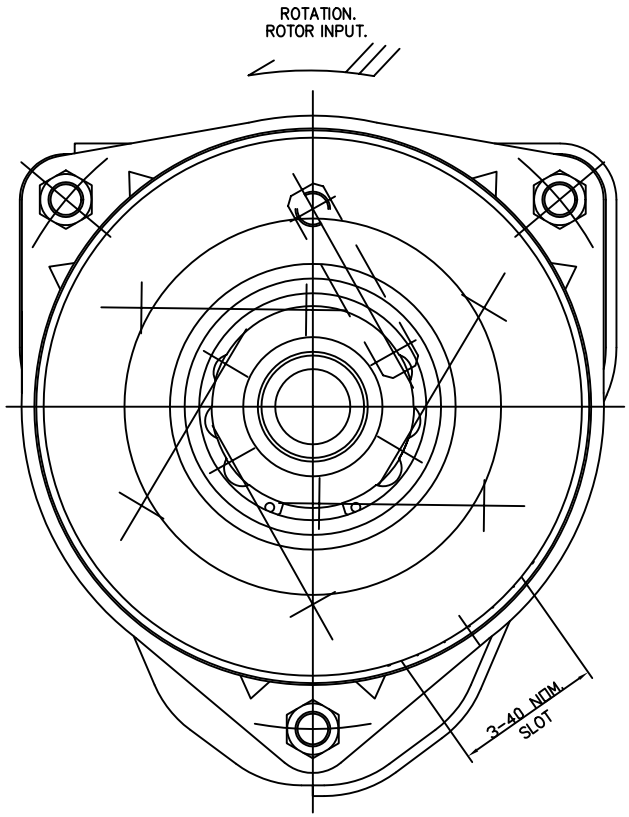

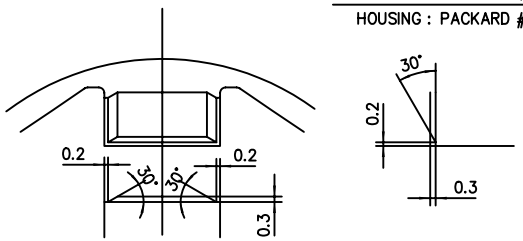

Y AND Z DETAIL(REFERNCE ONLY)

SPECIFICATIONS	
EXCITING VOLTAGE	D.C. 12 V
POWER CONSUMPTION	MAX. 50 W
STATIC CLUTCH TORQUE	
INITIAL MIN. 35 N・m	
AFTER BURNISHING MIN. 118 N・m	
STATIC BRAKE TORQUE	
INITIAL MIN. 1.5 N・m	
AFTER BURNISHING MIN. 3 N・m	
MIN PULL IN VOLTAGE	D.C. 8 V
LEAF SPRING : THICKNESS t=1.0	(COPPER COIL)

NOTES

1. Airgaps must be adjusted when coilsprings and airgap adjustment nuts are incorporated into the clutch/brake at the assembly.

注記

1. コイルスプリング、ナットは組立時に装着し、ギャップ調整を実施すること。

E.H.P. DLT MODEL PART No.179334

SURFACE ROUGHNESS UNLESS OTHERWISE SPECIFIED		GENERAL TOLERANCE FOR CLASS 14		
		RANGE		TOL.
▽	50S	OVER 0.5	TO 6	± 0.1
▽▽	25S	6	30	± 0.2
▽▽▽	6S	30	120	± 0.3
▽▽▽	3S	120	315	± 0.5
▽▽▽▽	0.8S	315	1000	± 0.8

HISTORY	52449700 △00
ISSUE NO	PLANT 2
ISSUE DATE	
WORKING PROCESS	
MATERIAL	
MATERIAL CODE	
MATERIAL SIZE	
HEAT TRTM	0
SURFACE TRTM	0
PARTS CODE	5913100000
	OGURA CLUTCH Co.,LTD.

APPROVED BY		DATE	SIZE A2
CHECKED BY		DATE	SCALE 1/1
DESIGNED BY		DATE	
DRAWN BY	s.shimura	DATE Aug.02.2001	
CUSTOMER	E.H.P.		
MODEL	GT1A−EH02		
ASSY NO			
NAME	MAGNETIC CLUTCH & BRAKE		
DWG NO	52449700 △00		1