REV		REVISION STATUS		NOTE	DATE	CHG BY	CHK BY
01	5	Change brake cover and bolt size. (3/8-24UNF was M10)	(3)	2	Next assemble	Sep.13.01	S.S	K.B.
02	6	Change snap ring.	(1)	2	Next assemble	Jun.15.04	S.S	K.B.

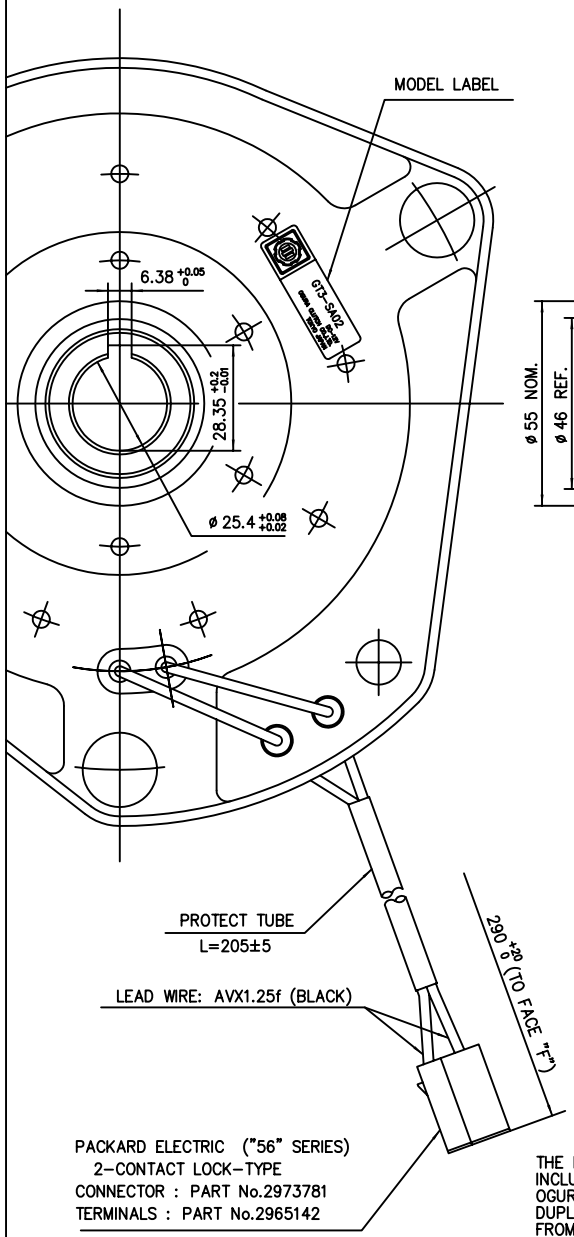

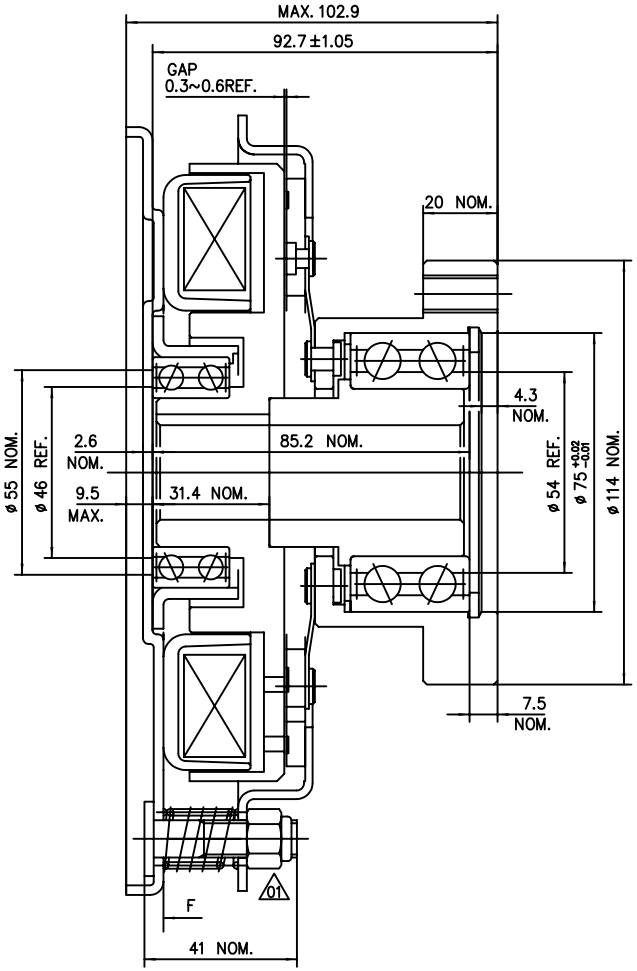

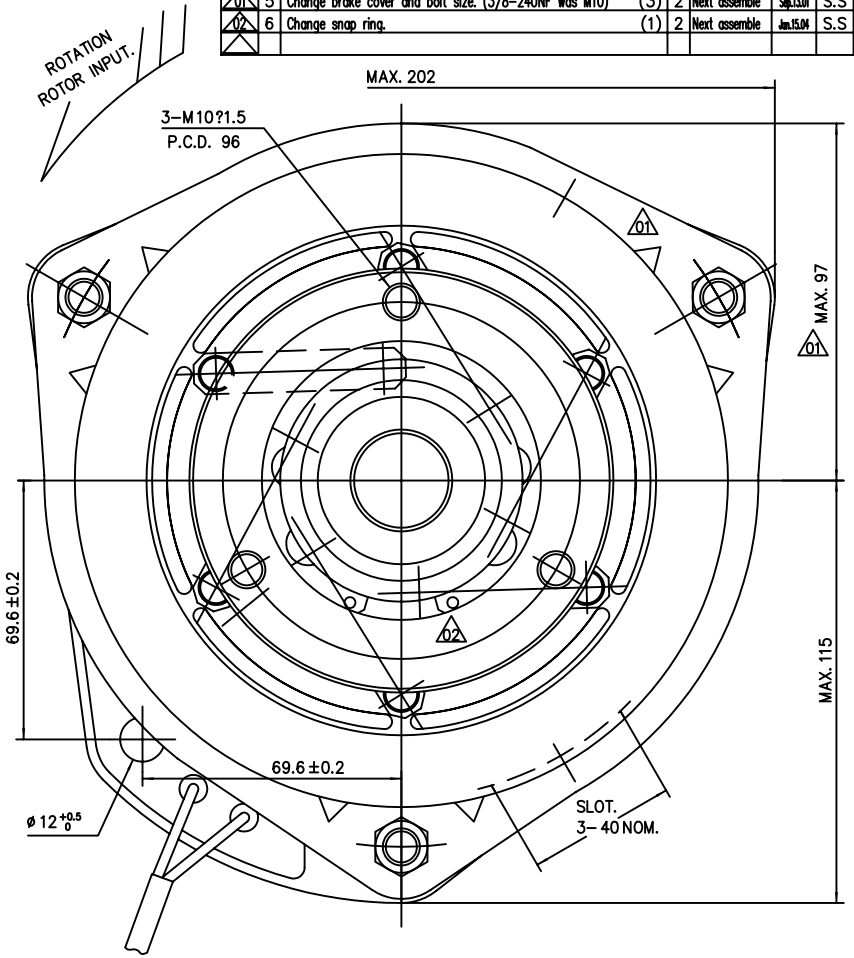

NOTES

1. Airgaps must be adjusted when coilsprings and airgap adjustment nuts are incorporated into the clutch/brake at the assembly.

SPECIFICATIONS

EXCITING VOLTAGE	D.C. 12 V
POWER CONSUMPTION	MAX. 50 W
STATIC CLUTCH TORQUE	
INITIAL MIN. 98 N?m	
AFTER BURNISHING MIN. 237 N?m	
STATIC BRAKE TORQUE	
INITIAL MIN. 1.96 N?m	
AFTER BURNISHING MIN. 4.9 N?m	
MIN PULL IN VOLTAGE	D.C. 8 V

(COPPER COIL)

REFERENCE ONLY

CONFIDENTIAL

THE DRAWINGS AND TECHNICAL INFORMATION INCLUDED HEREIN ARE THE PROPERTY OF OGURA INDUSTRIAL AND CAN NOT BE DUPLICATED WITHOUT WRITTEN APPROVAL FROM OI.

SURFACE ROUGHNESS UNLESS OTHERWISE SPECIFIED	GENERAL TOLERANCE FOR CLASS 1 RANGE	TOL.
▽ 50S	OVER 0.5 TO 6	± 0.1
▽▽ 25S	6 30	± 0.2
▽▽▽ 6S	30 120	± 0.3
▽▽▽ 3S	120 315	± 0.5
▽▽▽▽ 0.8S	315 1000	± 0.8

HISTORY	52426200 02	WORKING PROCESS	
ISSUE NO	PLANT 2	MATERIAL	
ISSUE DATE		MATERIAL CODE	
		MATERIAL SIZE	
		HEAT TRTM	0
		SURFACE TRTM	0
		PARTS CODE	5913100000
			OGURA CLUTCH Co.,LTD.

APPROVED BY	E.Maejima	DATE	Jun.11.2001	SIZE A2
CHECKED BY	K.Bamgawa	DATE	Jun.08.2001	SCALE 1/1
DESIGNED BY	M.Kagaki	DATE	Jun.08.2001	
DRAWN BY	S.shimura	DATE	Jun.07.2001	
CUSTOMER	EX			
MODEL	GT3-SA02			
ASSY NO				
NAME	MAGNETIC CLUTCH & BRAKE			
DWG NO	52426200 02			0