REV	REVISION STATUS	NOTE	DATE	DWG BY	CHK BY

CONFIDENTIAL
THE DRAWINGS AND TECHNICAL INFORMATION INCLUDED HEREIN ARE THE PROPERTY OF OGURA INDUSTRIAL CORP AND CAN NOT BE DUPLICATED WITHOUT WRITTEN APPROVAL FROM OIC.

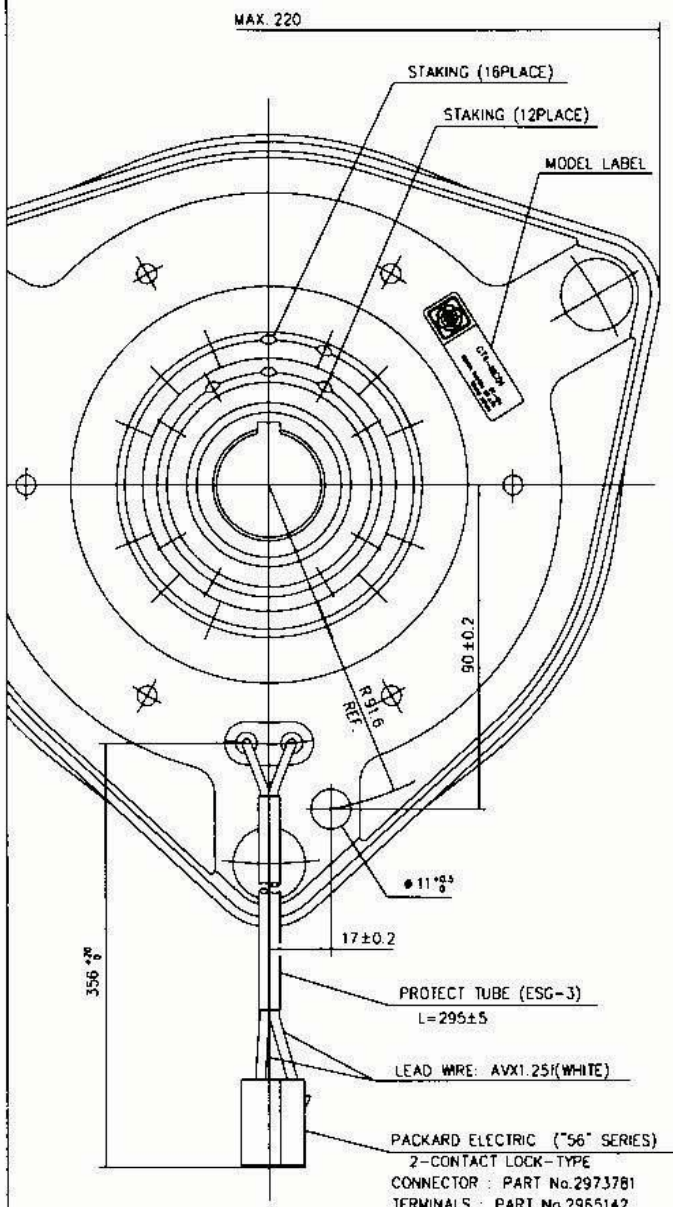

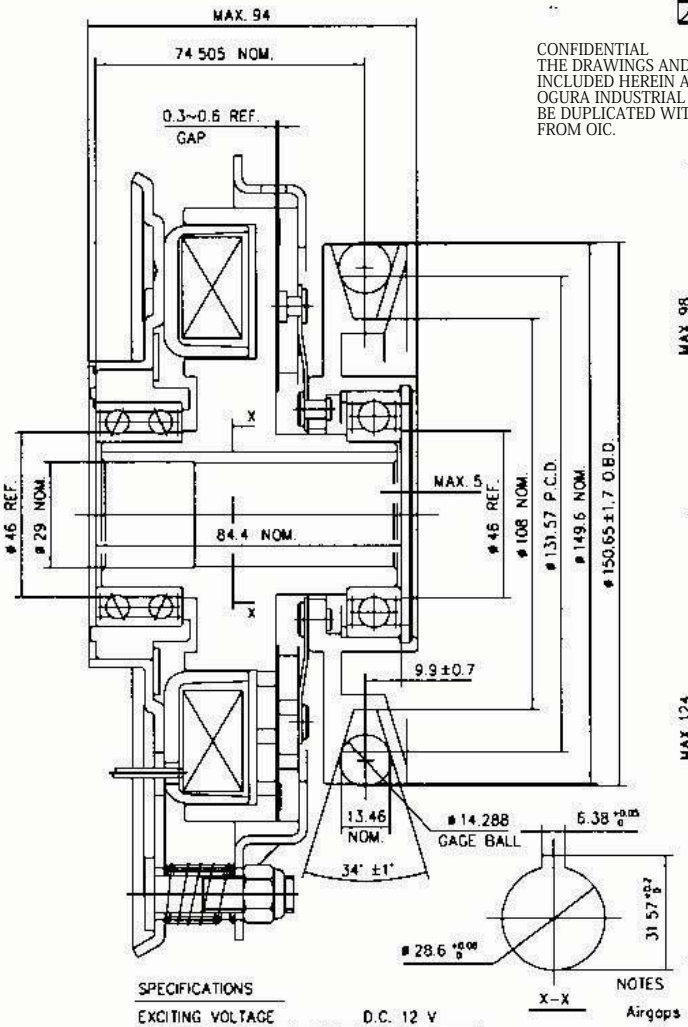

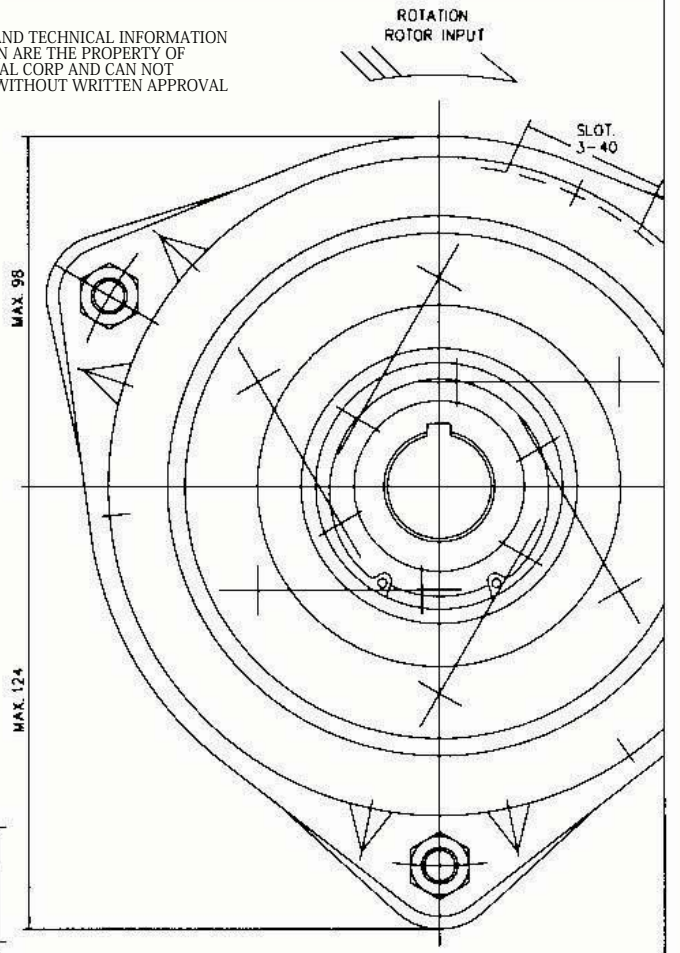

SPECIFICATIONS	
EXCITING VOLTAGE	D.C. 12 V
POWER CONSUMPTION	MAX. 68 W
STATIC CLUTCH TORQUE	
INITIAL MIN. 98 N?Em	
AFTER BURNISHING MIN. 271 N?Em	
STATIC BRAKE TORQUE	
INITIAL MIN. 3 N?Em	
AFTER BURNISHING MIN. 10 N?Em	
MIN PULL IN VOLTAGE	D.C. 8.5 V

(COPPER COIL)

NOTES

Airgaps must be adjusted when coilsprings and airgap adjustment nuts are incorporated into the clutch/brake at the assembly.

SURFACE ROUGHNESS UNLESS OTHERWISE SPECIFIED	GENERAL TOLERANCE FOR CLASS 1?	WORKING PROCESS	
▽ 50S	OMIT 0.5	MATERIAL	
▽▽ 25S	6 30 ± 0.2	MATERIAL CODE	
▽▽▽ 6S	30 120 ± 0.3	MATERIAL SIZE	
▽▽▽▽ 3S	120 315 ± 0.5	HEAT TRTM	O
▽▽▽▽▽ 0.8S	315 1000 ± 0.8	SURFACE TRTM	O
HISTORY	52368000	PARTS CODE	5913100000
ISSUE NO	PLANT 2		
ISSUE DATE			

APPROVED BY	DATE	SIZE	A2
CHECKED BY	DATE	SCALE	1/1
DESIGNED BY	DATE Jan.08.2001		
DRAWN BY	DATE Jan.08.2001		
CUSTOMER			
MODEL	GT4-MC01		
ASSY NO			
NAME	MAGNETIC CLUTCH & BRAKE		
DWG NO	52368000 00		1

OGURA CLUTCH Co.,LTD.