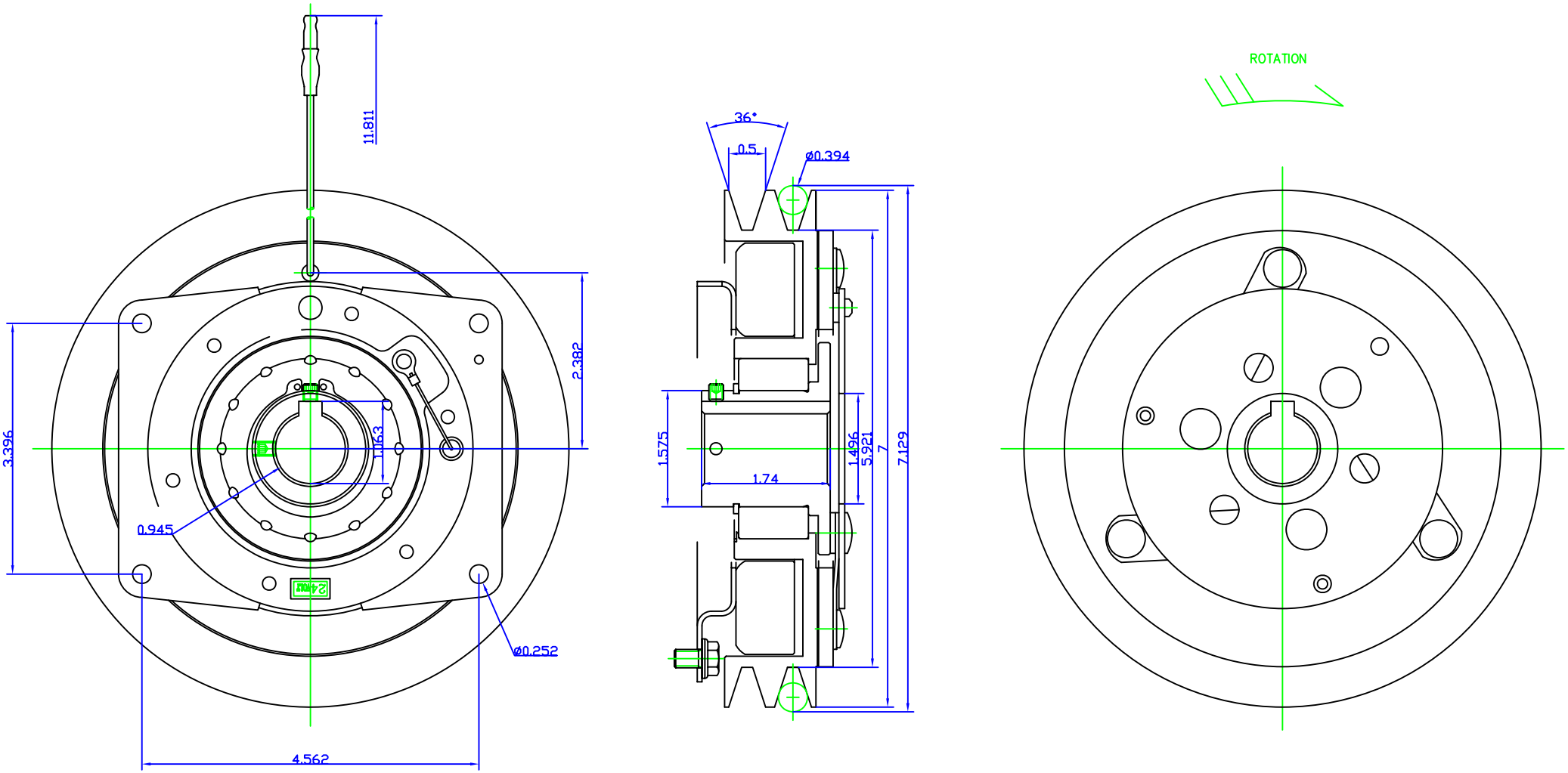
11.811
2.382
3.396
1.063
0.945
ø0.252
4.562
36°
0.5
ø0.394
1.575
1.74
1.496
5.921
7
7.129
ROTATION

522886