REV	REVISION STATUS	NOTE	DATE	CHD BY	CHK BY
△					
△					
△					

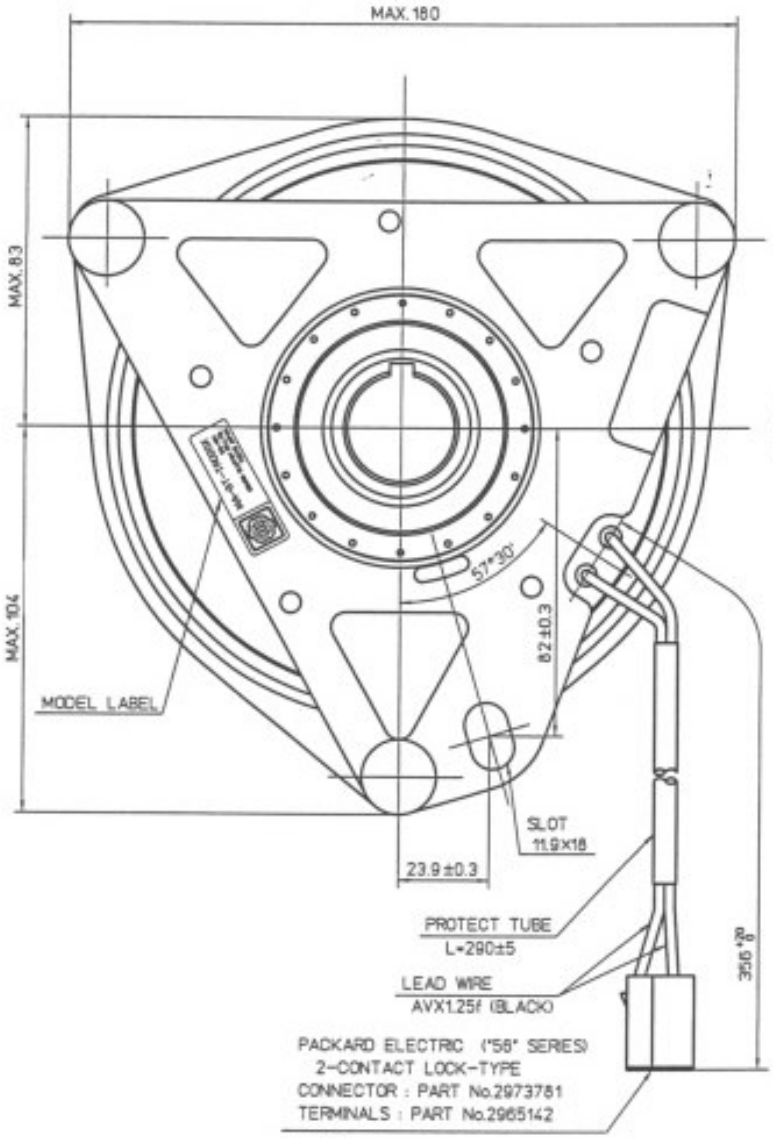

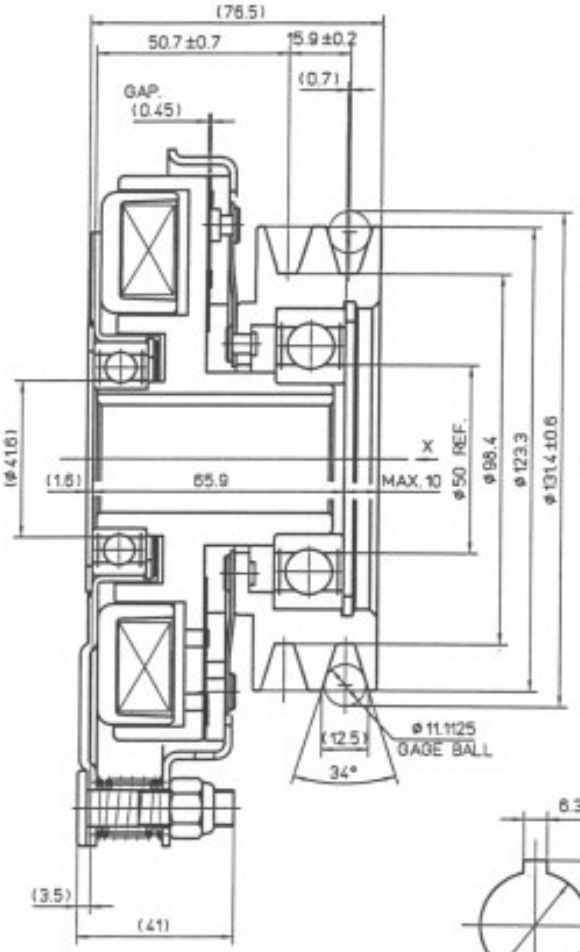

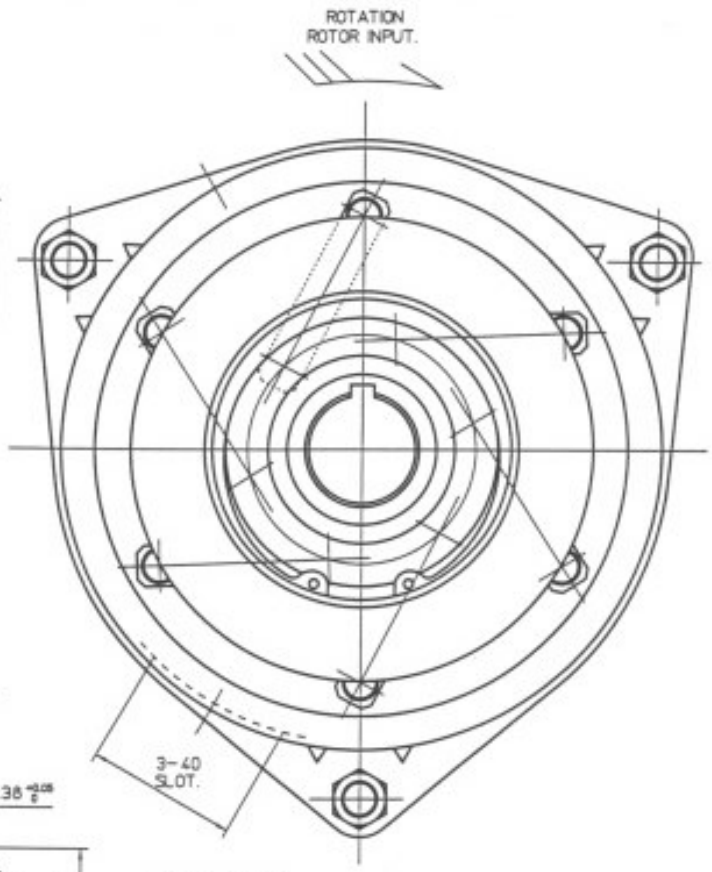

SPECIFICATIONS	
EXCITING VOLTAGE	D.C. 12 V
POWER CONSUMPTION	MAX. 50 W
STATIC CLUTCH TORQUE	MIN. 149 N·m (MIN. 110 Ft·lb)
STATIC BRAKE TORQUE	MIN. 3 N·m (MIN. 2.2 Ft·lb)
MIN PULL IN VOLTAGE	D.C. 8.5 V

(COPPER COIL)

THE DRAWINGS AND TECHNICAL INFORMATION INCLUDED HEREIN ARE THE PROPERTY OF OGURA INDUSTRIAL AND CAN NOT BE DUPLICATED WITHOUT WRITTEN APPROVAL FROM OI.

NOTES

1. Airgaps must be adjusted when coilsprings and airgap adjustment nuts are incorporated into the clutch/brake at the assembly.
2. Friction surface treatment : (Rotor) Coating treatment (Black)

SURFACE ROUGHNESS UNLESS OTHERWISE SPECIFIED	GENERAL TOLERANCE FOR CLASS M	WORKING PROCESS	APPROVED BY / DATE / SIZE A2
	RANGE / TOL	MATERIAL	CHECKED BY / DATE / SCALE 1/1
		MATERIAL CODE	DESIGNED BY / DATE
		MATERIAL SIZE	DRAWN BY / DATE
		HEAT TRTM 0	CUSTOMER
HISTORY 52217700		SURFACE TRTM 0	MODEL MA-GT-TR020X
ISSUE NO / PLANT 2		PARTS CODE 5913100000	ASSY NO
ISSUE DATE		OGURA CLUTCH Co.,LTD.	NAME MAGNETIC CLUTCH & BRAKE
			DWG NO 52217700