REV		REVISION STATUS		NOTE	DATE	CHG BY	CHK BY
01	1	Change Tube etc.	(5)	2 Next assemble	06.06.00	H.S	M.K.

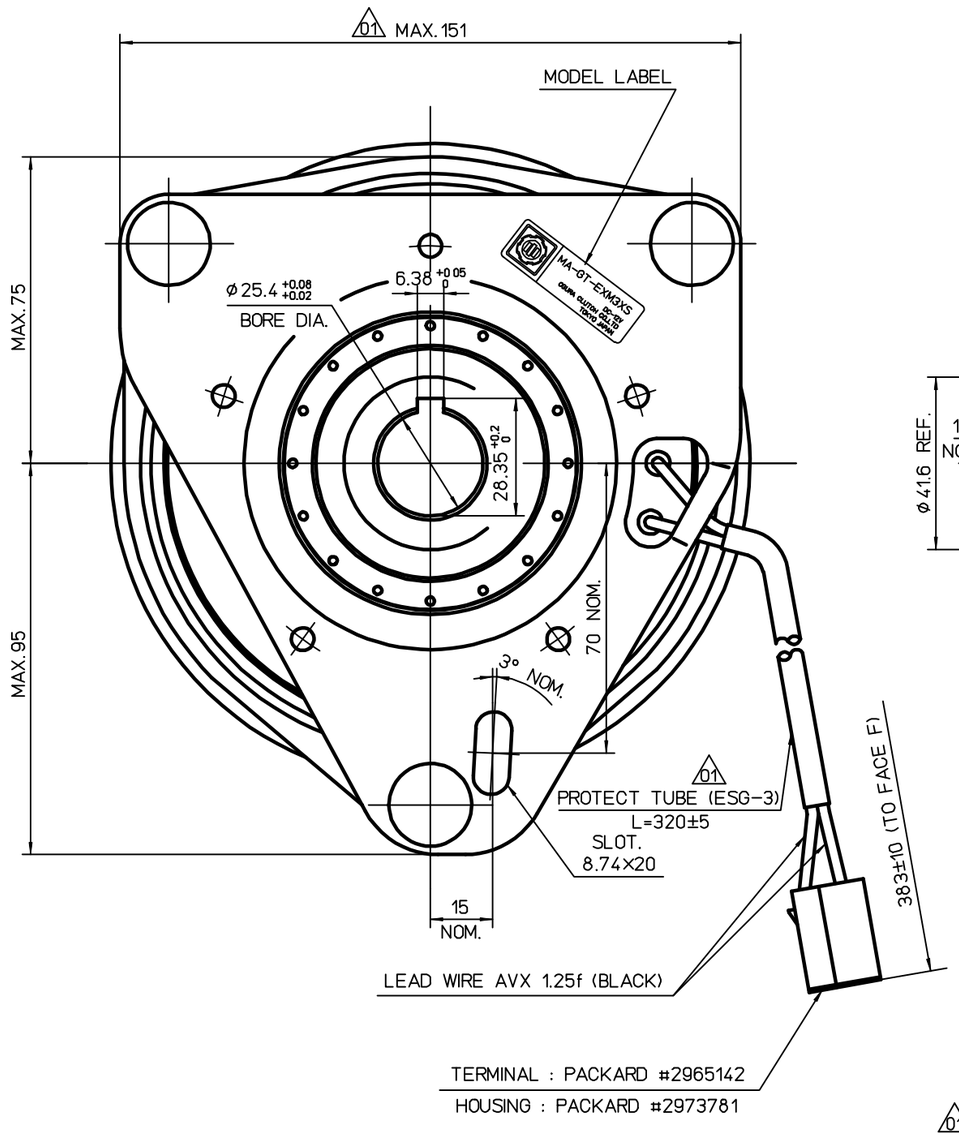

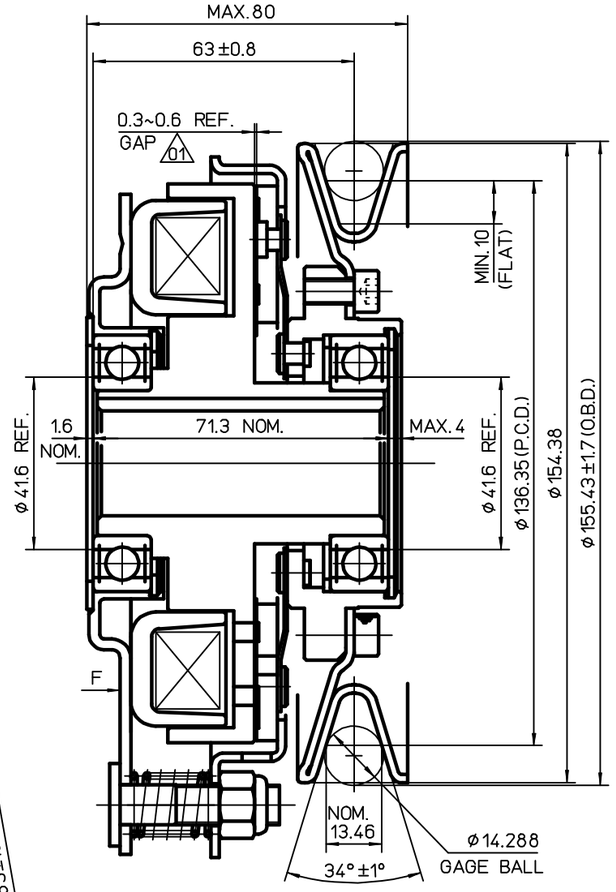

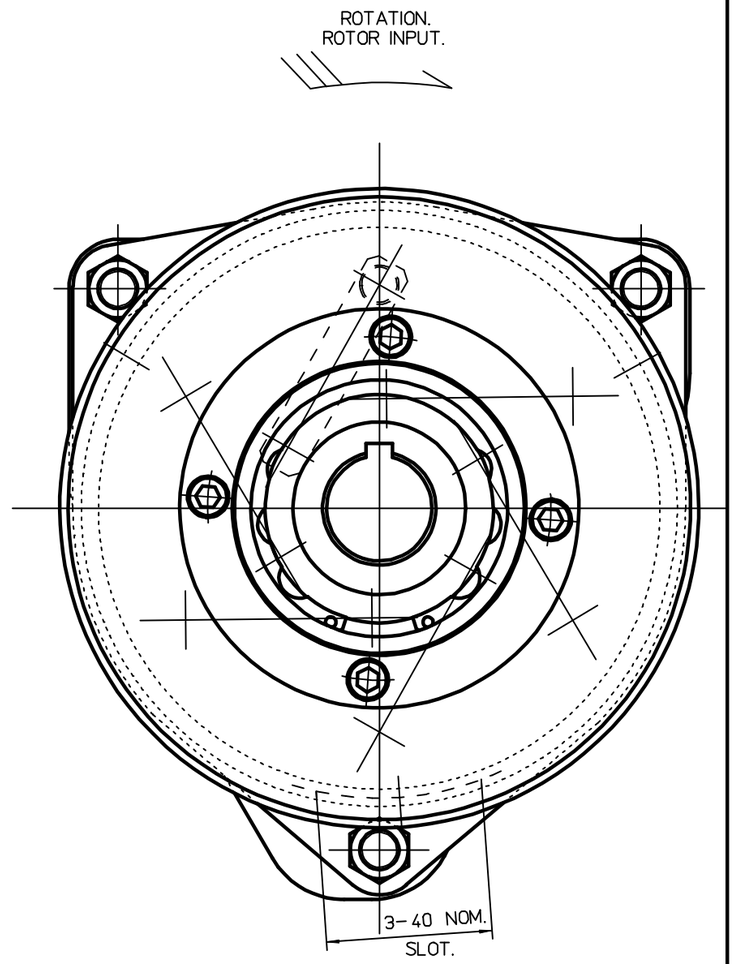

SPECIFICATIONS

EXCITING VOLTAGE	D.C. 12 V
POWER CONSUMPTION	MAX. 50 W
01 STATIC CLUTCH TORQUE	
INITIAL MIN. 35 N·m	
AFTER BURNISHING MIN 118 N·m	
01 STATIC BRAKE TORQUE	
INITIAL MIN. 1.5 N·m	
AFTER BURNISHING MIN. 3 N·m	
MIN PULL IN VOLTAGE	D.C. 8 V

(COPPER COIL)

SURFACE ROUGHNESS UNLESS OTHERWISE SPECIFIED		GENERAL TOLERANCE FOR CLASS M RANGE OVER	TO	TOL.
▽	50S	0.5	6	± 0.1
▽▽	25S	6	30	± 0.2
▽▽▽	6S	30	120	± 0.3
▽▽▽ 8	3S	120	315	± 0.5
▽▽▽▽	0.8S	315	1000	± 0.8

HISTORY	52178800 01
ISSUE NO	PLANT 2
ISSUE DATE	
WORKING PROCESS	
MATERIAL	
MATERIAL CODE	
MATERIAL SIZE	
HEAT TRTM	0
SURFACE TRTM	0
PARTS CODE	5913100000
OGURA CLUTCH Co.,LTD.	

APPROVED BY E.Maejima	DATE Nov.09 1998	SIZE	A2
CHECKED BY M.Sakuraba	DATE Nov.09 1998	SCALE	1/1
DESIGNED BY R.Sugeki	DATE Nov.05.1998		
DRAWN BY R.Sugeki	DATE Nov.05.1998		
CUSTOMER EX			
MODEL MA-GT-EXM3XS			
ASSY NO			
NAME MAGNETIC CLUTCH & BRAKE			
DWG NO 52178800 01		SHT.	1