REV		REVISION STATUS		NOTE		DATE	CHG BY	CHK BY
06	2	Change Bearing seal color.	(1)	2	Next assemble	May.28.01	S.S	K.B.
07	2	Turn the band clip.	(1)	2	Next assemble	Sep.13.01	S.S	K.B.
08	1	Add Bearing model.	(1)	4	Be executed	Dec.14.01	S.S	K.B

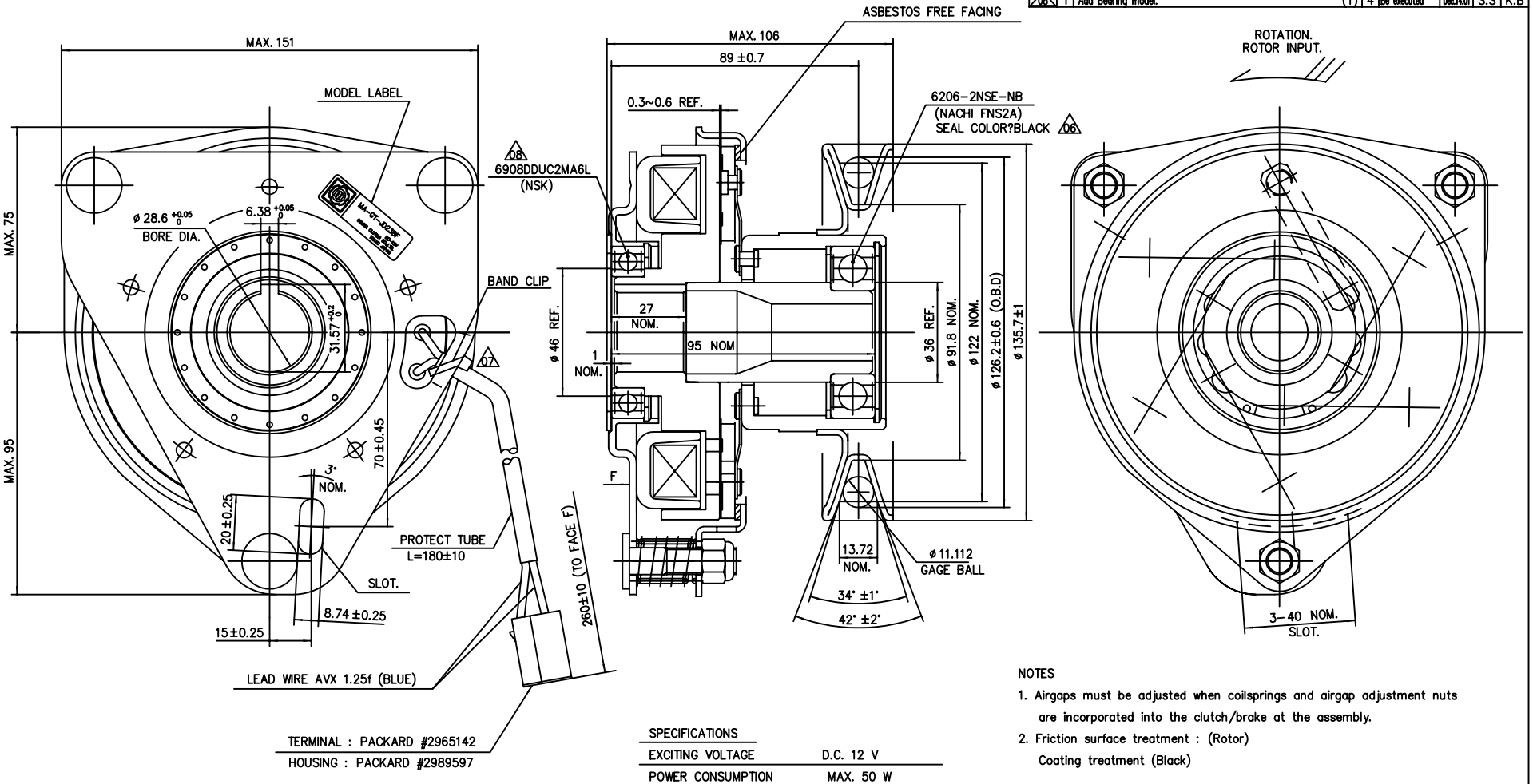

NOTES

1. Airgaps must be adjusted when coilsprings and airgap adjustment nuts are incorporated into the clutch/brake at the assembly.
2. Friction surface treatment : (Rotor)
   Coating treatment (Black)

SPECIFICATIONS

EXCITING VOLTAGE	D.C. 12 V
POWER CONSUMPTION	MAX. 50 W
STATIC CLUTCH TORQUE	
INITIAL MIN. 49 Nm	
AFTER BURNISHING MIN. 118 Nm	
STATIC BRAKE TORQUE	
INITIAL MIN. 1 Nm	
AFTER BURNISHING MIN. 3 Nm	
MIN PULL IN VOLTAGE	D.C. 8 V

(COPPER COIL)

CONFIDENTIAL

THE DRAWINGS AND TECHNICAL INFORMATION INCLUDED HEREIN ARE THE PROPERTY OF OGURA INDUSTRIAL AND CAN NOT BE DUCATED WITHOUT WRITTEN APPROVAL FROM OIC.

SURFACE ROUGHNESS UNLESS OTHERWISE SPECIFIED		GENERAL TOLERANCE FOR CLASS 1		
		RANGE OVER	RANGE TO	TOL.
▽	50S	0.5	6	± 0.1
▽▽	25S	6	30	± 0.2
▽▽▽	6S	30	120	± 0.3
▽▽▽▽	3S	120	315	± 0.5
▽▽▽▽	0.8S	315	1000	± 0.8

HISTORY	52096300 07
ISSUE NO	PLANT 2
ISSUE DATE	
WORKING PROCESS	
MATERIAL	
MATERIAL CODE	
MATERIAL SIZE	
HEAT TRTM	0
SURFACE TRTM	0
PARTS CODE	5913100000
	OGURA CLUTCH Co.,LTD.

APPROVED BY	DATE Mar.17.1998	SIZE	A2
CHECKED BY	DATE Mar.16.1998	SCALE	1/1
DESIGNED BY	DATE Mar.15.1998		
DRAWN BY	DATE Mar.15.1998		
CUSTOMER	J. DEERE		
MODEL	MA-GT-JD23BF		
ASSY NO			
NAME	MAGNETIC CLUTCH & BRAKE		
DWG NO	52096300 08		0