REV		REVISION STATUS		NOTE		DATE	CHG BY	CHK BY
06	6	Change Ball bearing.	(1)	2	Next assemble	Mar.13.02	S.S	K.B.
05	6	Delete cover. Add dimension.	(3)	2	Next assemble	Feb.06.07	S.S	K.B.
06	1	Add note. (Change surface treatment)	(1)	2	Next assemble	May 16.07	S.S	K.B.

REFERENCE ONLY

CONFIDENTIAL

THE DRAWINGS AND TECHNICAL INFORMATION INCLUDED HEREIN ARE THE PROPERTY OF OGURA INDUSTRIAL AND CAN NOT BE DUPLICATED WITHOUT WRITTEN APPROVAL FROM OI.

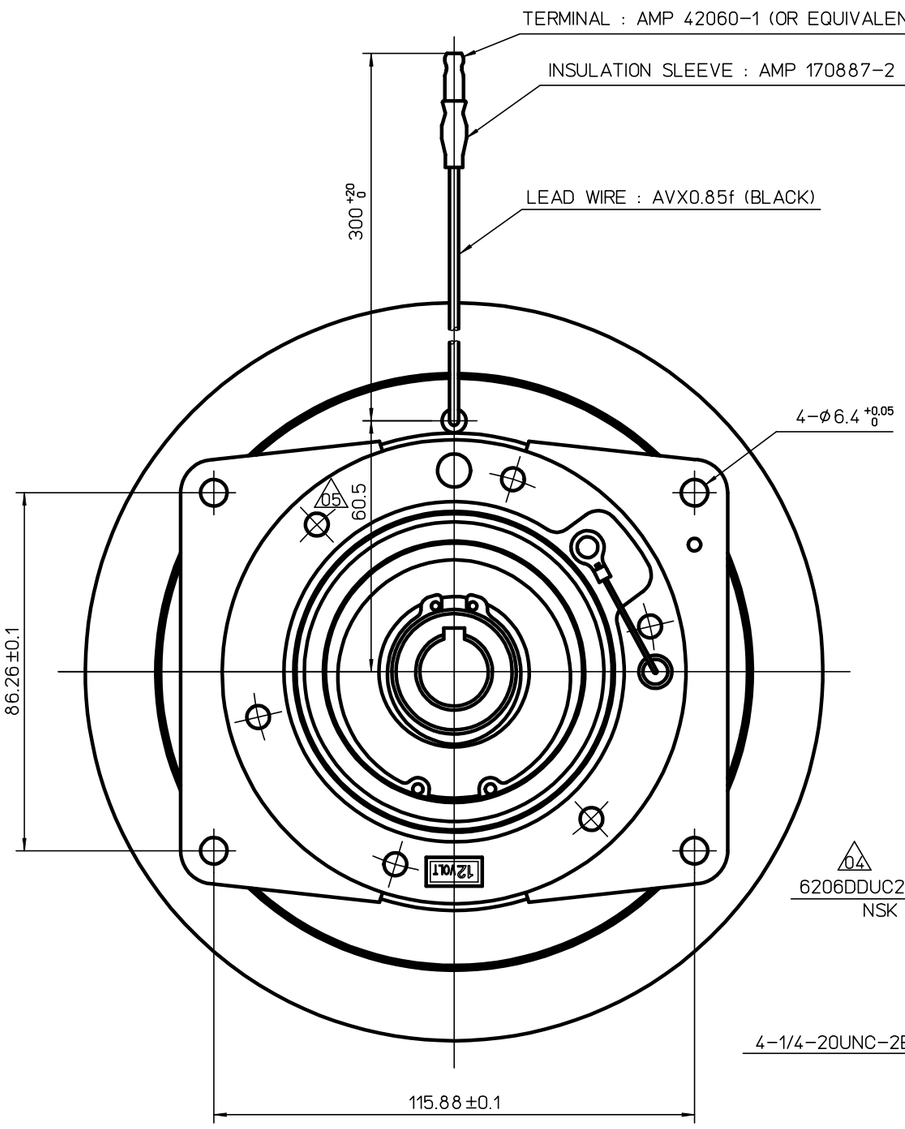

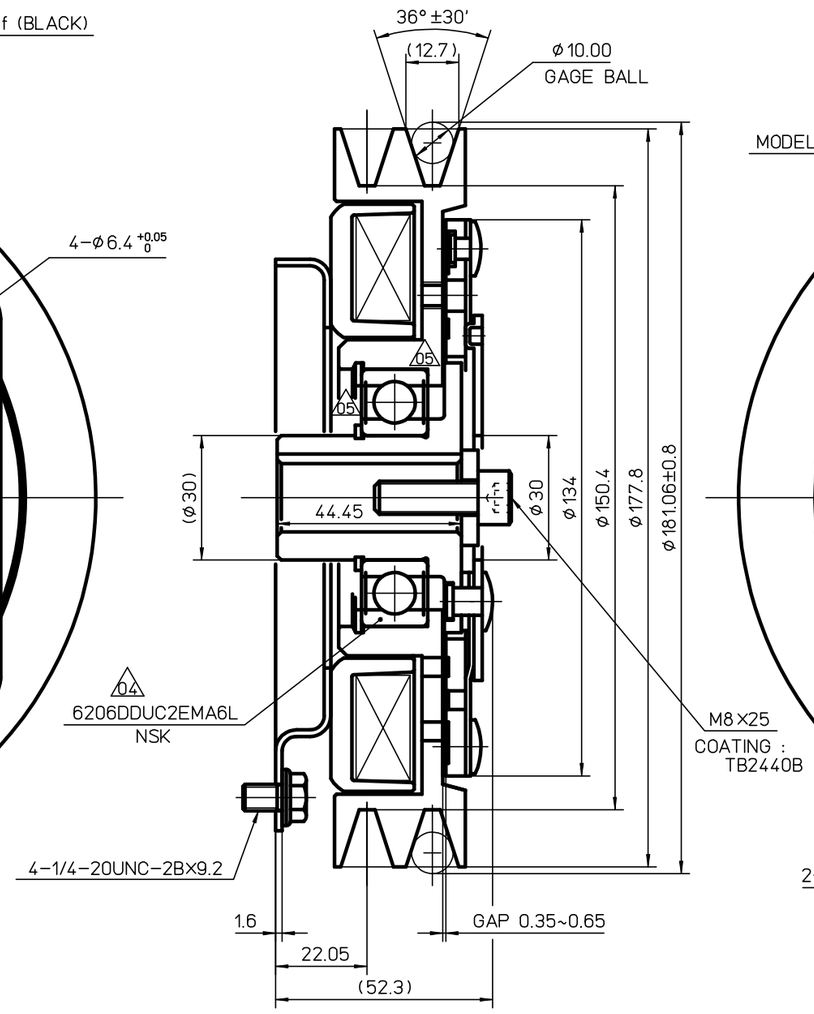

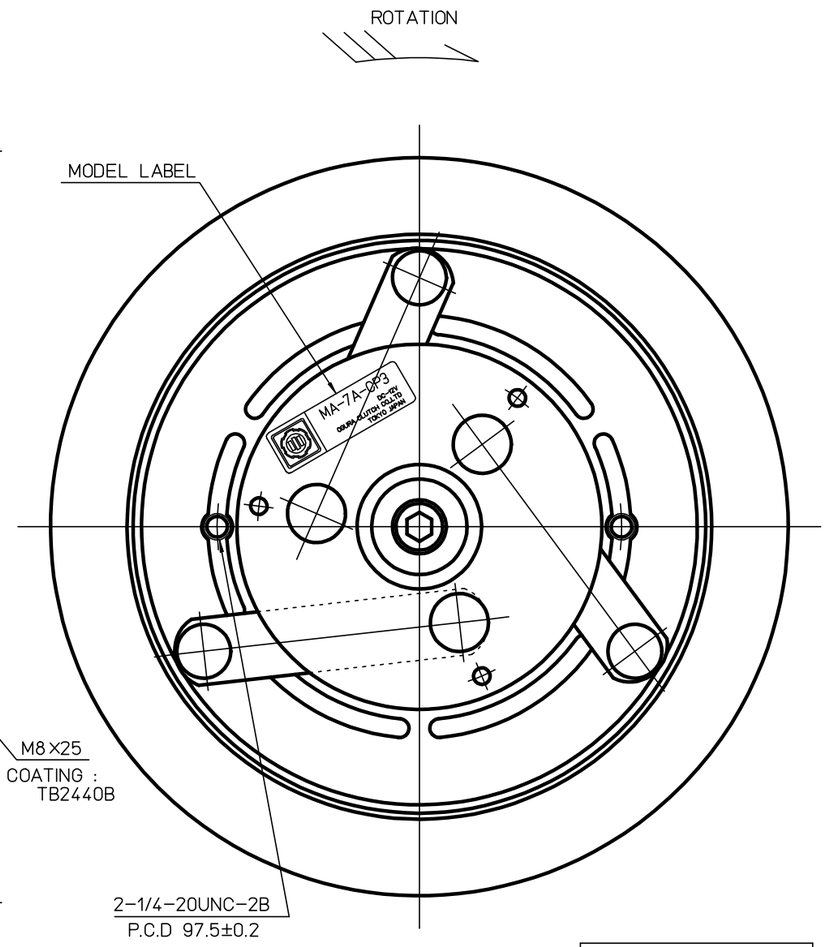

	Friction surface treatment
Rotor assy	None-coated
Armature assy	None-coated

SPECIFICATIONS(at 20°C)

1. EXCITING VOLTAGE : D.C.12 V
2. POWER CONSUMPTION : MAX.43 W
3. STATIC TORQUE

INITIAL : 39 N·m

FINAL : NOMINAL 101 N·m

(ALUMINUM COIL)

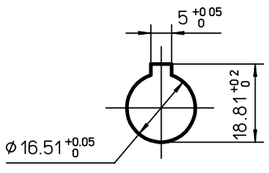

CLUTCH BORE SIZE

NOTE

06 Hex-chrome free zinc plating : 3MFZn8 (Rivet and Bolt : 3MFZn5)

SURFACE ROUGHNESS UNLESS OTHERWISE SPECIFIED	GENERAL TOLERANCE FOR CLASS f4		
	RANGE		TOL.
▽ 50S	OVER 0.5	TO 6	± 0.1
▽▽ 25S	6	30	± 0.2
▽▽▽ 6S	30	120	± 0.3
▽▽▽ 3S	120	315	± 0.5
▽▽▽▽ 0.8S	315	1000	± 0.8

HISTORY 52088800 06

ISSUE NO | PLANT 2

ISSUE DATE

WORKING PROCESS

MATERIAL

MATERIAL CODE

MATERIAL SIZE

HEAT TRTM 0

SURFACE TRTM 0

PARTS CODE 5913100000

OGURA CLUTCH Co.,LTD.

APPROVED BY E.Maejima	DATE Feb.11.1998	SIZE A2	
CHECKED BY K.Ishiuchi	DATE Feb.11.1998	SCALE 1/1	
DESIGNED BY N.Suzuki	DATE Feb.10.1998		
DRAWN BY S.Onda	DATE Feb.09.1998		
CUSTOMER EX			
MODEL MA-7A-CP3			
ASSY NO			
NAME MAGNETIC CLUTCH			
DWG NO 52088800 06			