REV		REVISION STATUS		NOTE		DATE	CHG BY	CHK BY
06	6	Change Ball bearing.	(1)	2	Next assemble	Mar.13.02	S.S	K.B.
05	6	Delete cover. Add dimension.	(3)	2	Next assemble	Jan.19.07	S.S	K.B.
04	1	Add note (Change surface treatment)	(1)	2	Next assemble	May 16.07	S.S	K.B.

REFERENCE ONLY

CONFIDENTIAL

THE DRAWINGS AND TECHNICAL INFORMATION INCLUDED HEREIN ARE THE PROPERTY OF OGURA INDUSTRIAL AND CAN NOT BE DUPLICATED WITHOUT WRITTEN APPROVAL FROM OI.

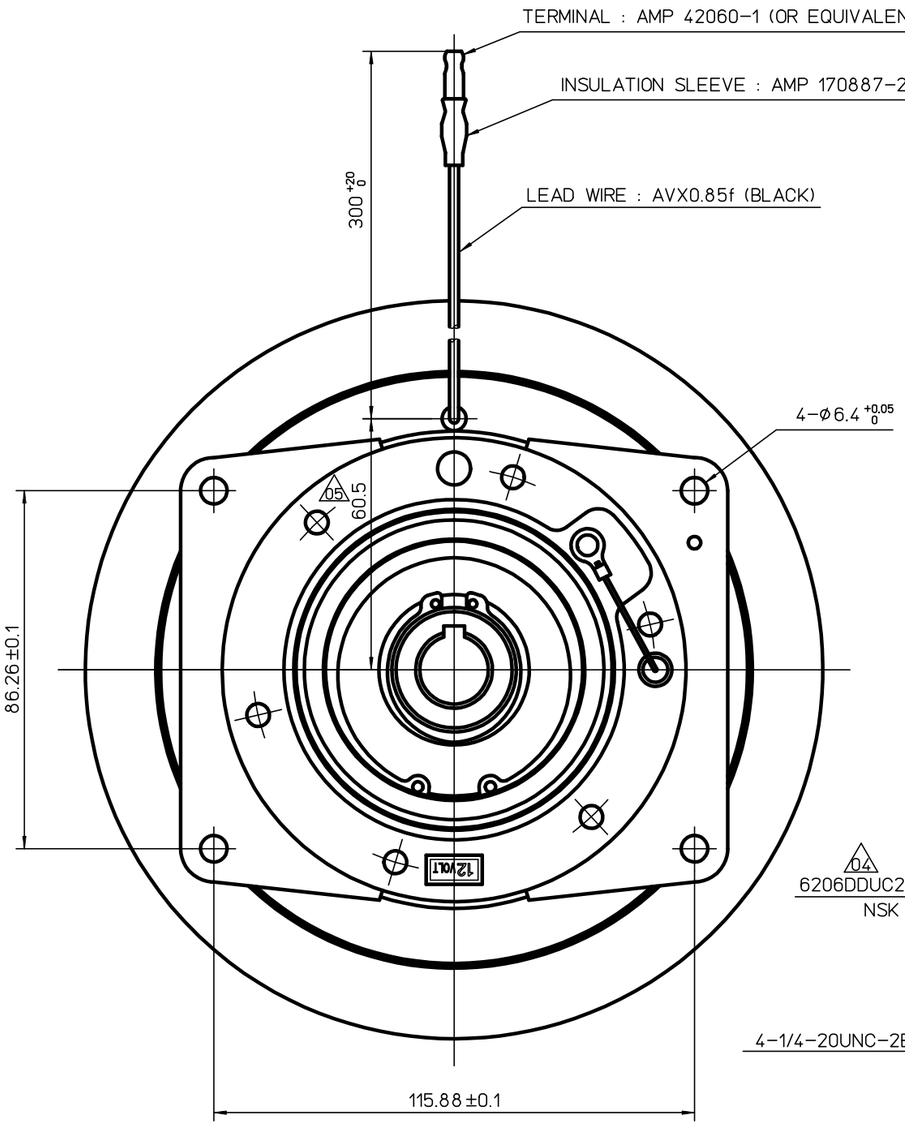

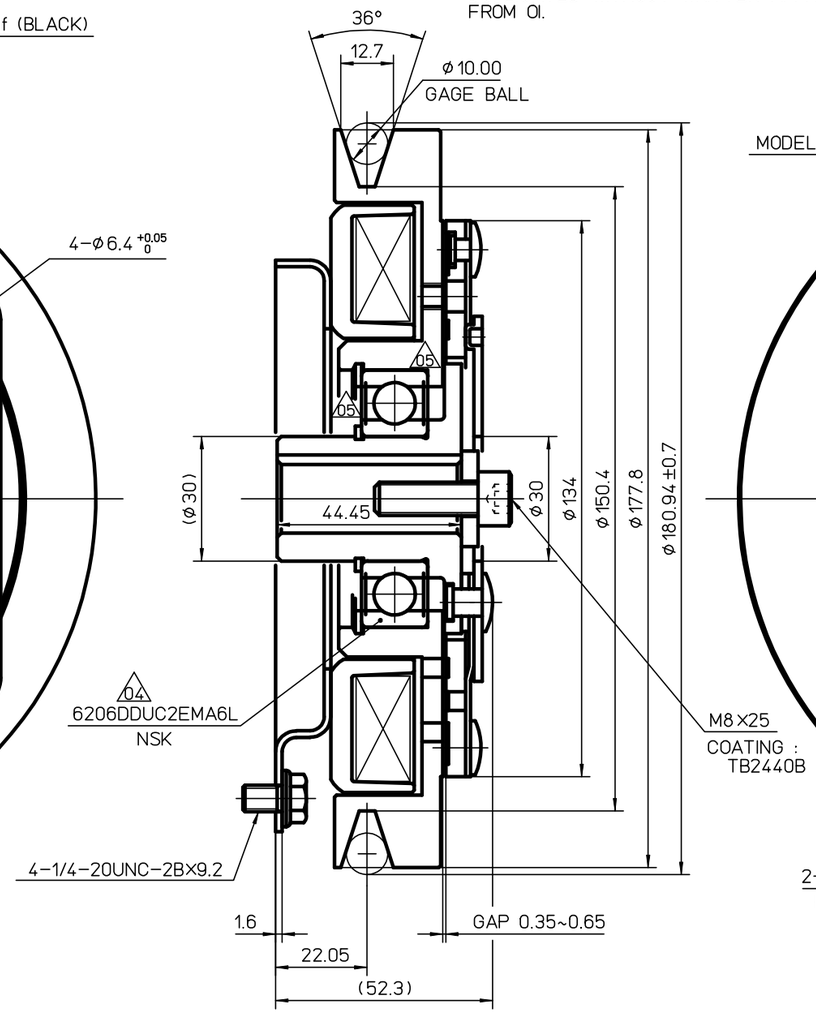

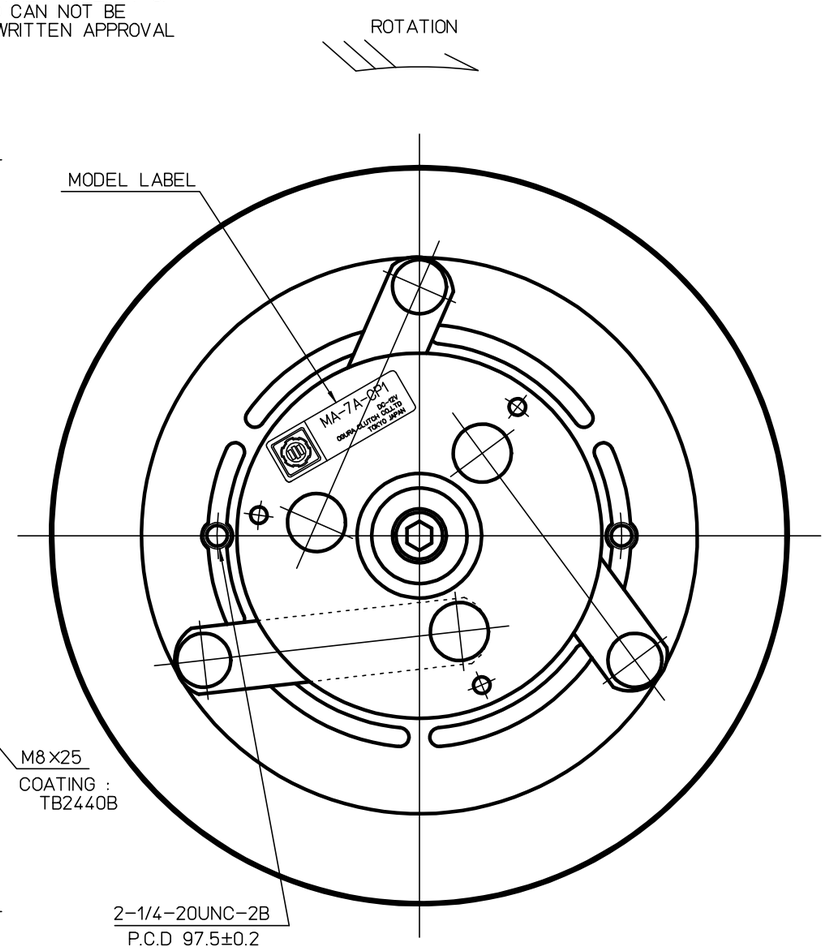

	Friction surface treatment
Rotor assy	None-coated
Armature assy	None-coated

SPECIFICATIONS(at 20°C)

1. EXCITING VOLTAGE : D.C.12 V
2. POWER CONSUMPTION : MAX.43 W
3. STATIC TORQUE

INITIAL : 39 N·m

FINAL : NOMINAL 101 N·m

(ALUMINUM COIL)

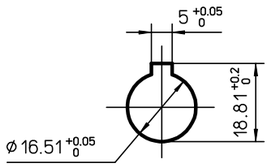

CLUTCH BORE SIZE

NOTE

06 Hex-chrome free zinc plating : 3MFZn8 (Rivet and Bolt : 3MFZn5)

SURFACE ROUGHNESS UNLESS OTHERWISE SPECIFIED		GENERAL TOLERANCE FOR CLASS 14		
		RANGE		TOL.
▽	50S	OVER 0.5	TO 6	± 0.1
▽▽	25S	6	30	± 0.2
▽▽▽	6S	30	120	± 0.3
▽▽▽ a	3S	120	315	± 0.5
▽▽▽▽	0.8S	315	1000	± 0.8

WORKING PROCESS	
MATERIAL	
MATERIAL CODE	
MATERIAL SIZE	
HEAT TRTM	0
SURFACE TRTM	0
PARTS CODE	5913100000
HISTORY	52088600 06
ISSUE NO	
PLANT	2
ISSUE DATE	
OGURA CLUTCH Co.,LTD.	

APPROVED BY	E.Maejima	DATE Feb.11.1998	SIZE A2
CHECKED BY	M.Ishiuchi	DATE Feb.11.1998	SCALE 1/1
DESIGNED BY	M.Sugaki	DATE Feb.09.1998	
DRAWN BY	S.Onda	DATE Feb.09.1998	
CUSTOMER	EX		
MODEL	MA-7A-CP1		
ASSY NO			
NAME	MAGNETIC CLUTCH		
DWG NO	52088600 06		