REV	REVISION STATUS		NOTE	DATE	DIG BY	CHK BY
9	Notes Add	(1)	1 Immediately	Aug.27.'97	S.O	H.I

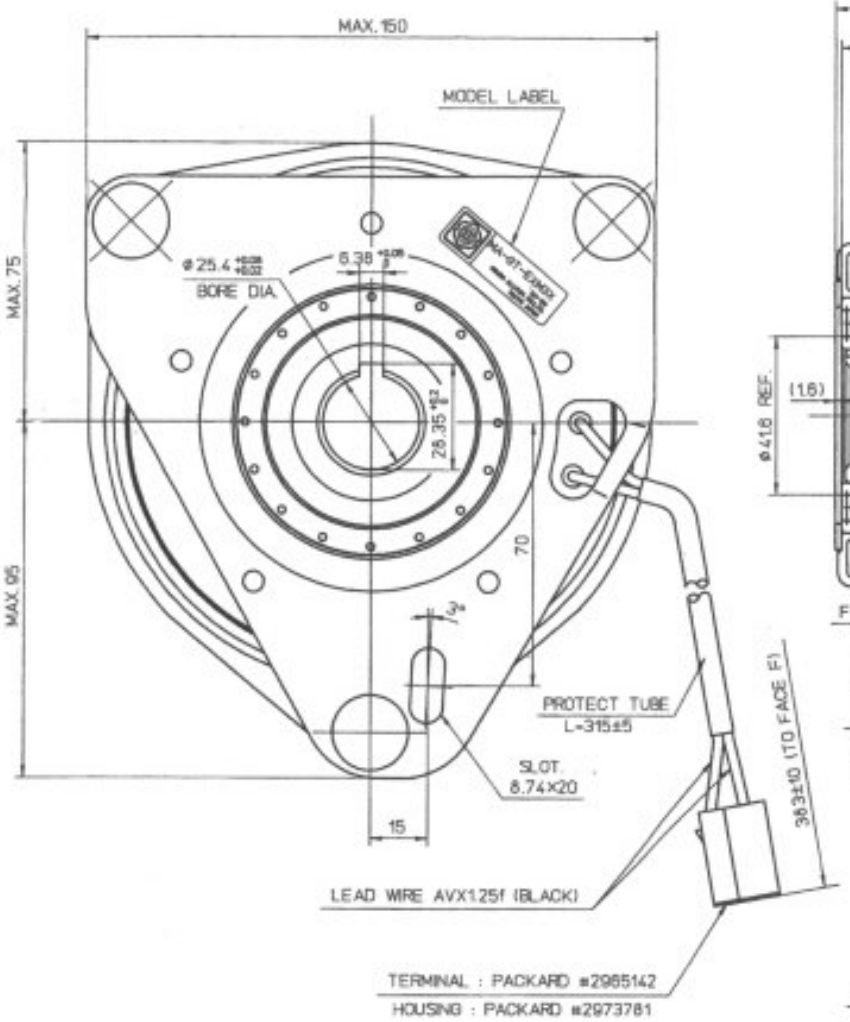

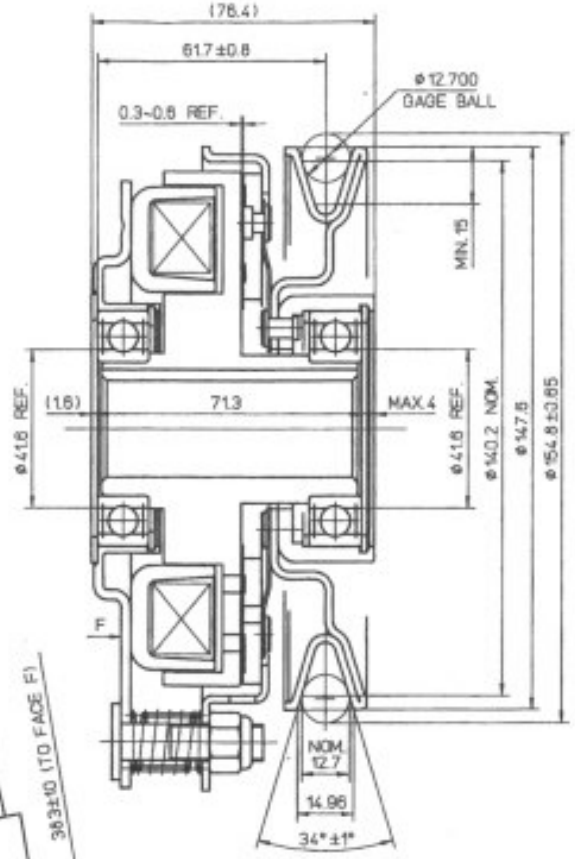

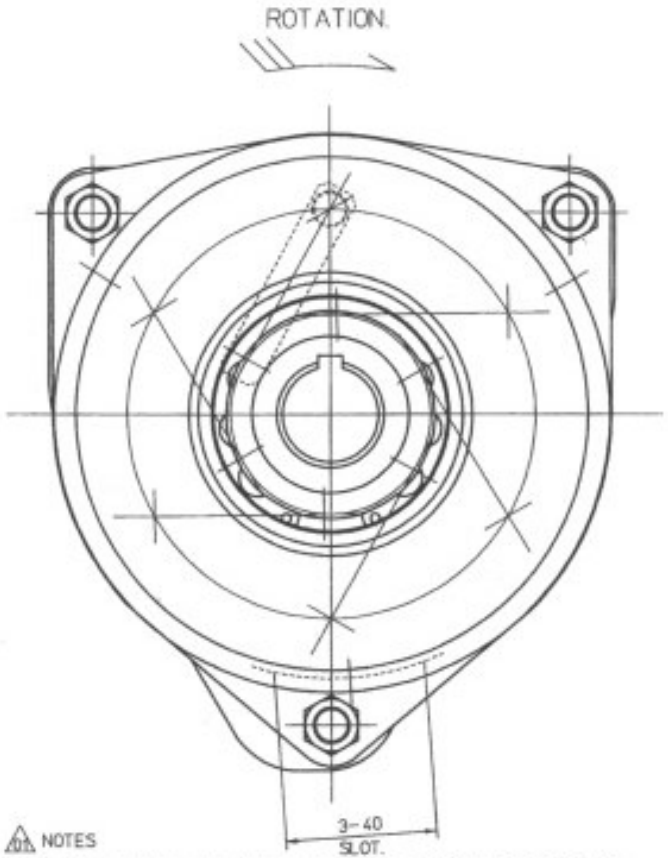

NOTES

1. Airgaps must be adjusted when colsprings and airgap adjustment nuts are incorporated into the clutch/brake at the assembly.

注記

1. コイルスプリング，ナットは組立時に装着し，ギャップ調整を実施すること．

SPECIFICATIONS	
EXCITING VOLTAGE	D.C. 12 V
POWER CONSUMPTION	MAX. 50 W
STATIC CLUTCH TORQUE	118 N·m (87 lbw·ft)
STATIC BRAKE TORQUE	3 N·m (2.2 lbw·ft)
MIN PULL IN VOLTAGE	D.C. 8 V

(COPPER COIL)

SURFACE ROUGHNESS UNLESS OTHERWISE SPECIFIED	GENERAL TOLERANCE FOR CLASS M	WORKING PROCESS	APPROVED Aug.27.'97
	RANGE / TOL.	SEMI-CORNER BREAKS MAX 0.5 (UNLESS NOTED)	CHECKED Aug.27.'97
▽ 50S	0.5 ~ 6 ± 0.1	MATERIAL	DESIGNED Jul.08.'97
▽▽ 25S	6 ~ 30 ± 0.2	MATERIAL CODE	DRAWN Jul.08.'97
▽▽▽ 6S	30 ~ 120 ± 0.3	MATERIAL SIZE	
▽▽▽▽ 3S	120 ~ 315 ± 0.5	HEAT TREATMENT 0	
▽▽▽▽▽ 0.8S	315 ~ 1000 ± 0.8	SURFACE TREATMENT 0	
HISTORY		PARTS CODE 5913100000	
ISSUE NO	PLANT 2	OGURA CLUTCH Co.,LTD.	
ISSUE DATE			

DATE	SIZE A2
DATE	SCALE 1/1
DATE	
CUSTOMER	
MODEL	MA-GT-EXM3X
ASSY NO	
NAME	MAGNETIC CLUTCH & BRAKE
DWG NO	52035600 01
	SHT. /

THE DRAWINGS AND TECHNICAL INFORMATION INCLUDED HEREIN ARE THE PROPERTY OF OGURA INDUSTRIAL AND CAN NOT BE DUPLICATED WITHOUT WRITTEN APPROVAL FROM OI.