REV		REVISION STATUS		NOTE		DATE	CHG BY	CHK BY
01	4	Bolt Change	(1)	2	Next assemble	Jan.20.99	S.O	T.A.
02	5	Coil change.	(1)	2	Next assemble	Jan.22.99	N.S	T.A.
03	9	Coil change.	(1)	1	Immediately	Mar.06.99	N.S	T.A.

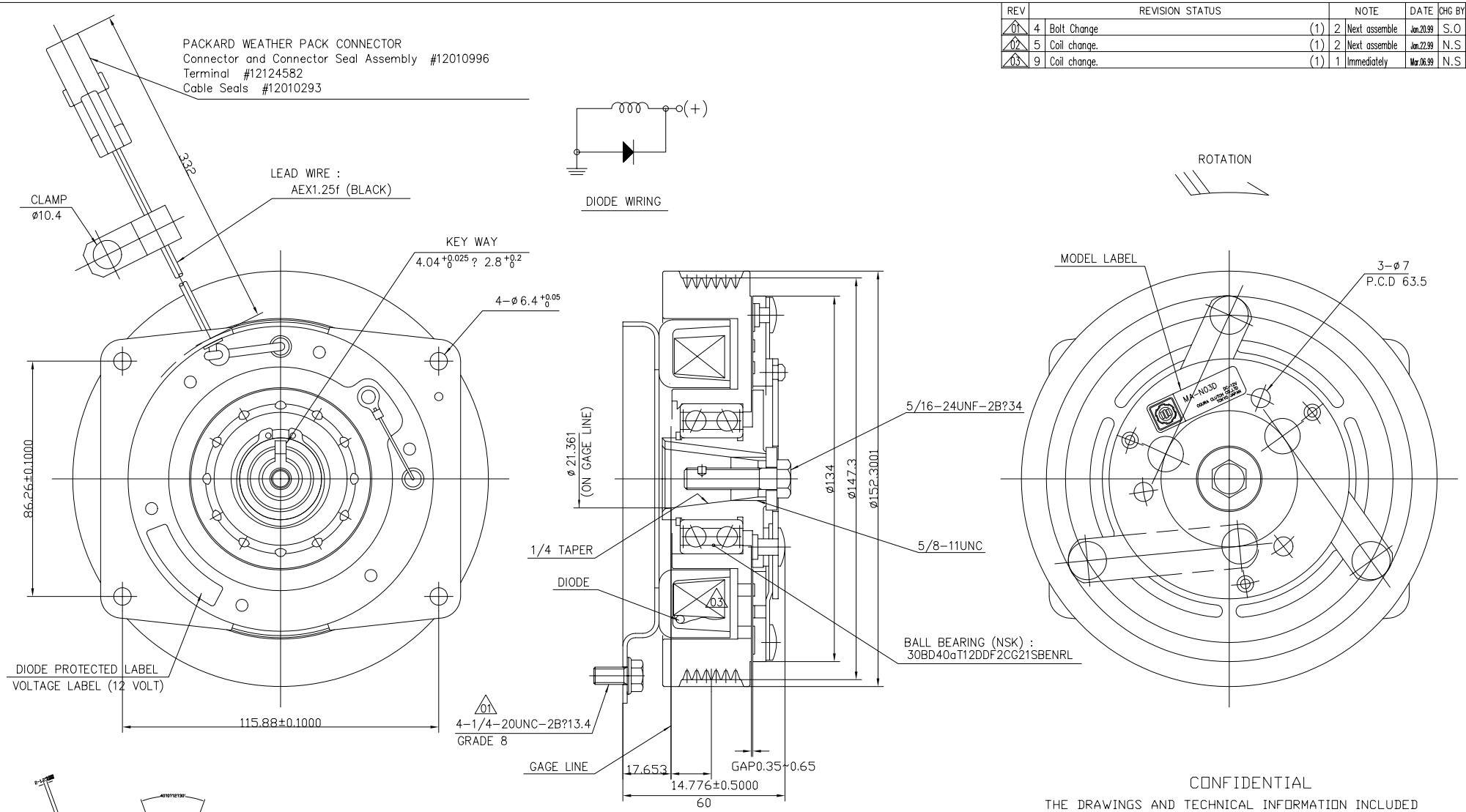

SPECIFICATIONS

1. EXCITING VOLTAGE?D.C.12 V
2. BELT? PLY ?V? 6K TYPE
3. STATIC TORQUE
   AFTER BURNISHING?102 N?m {75 LB?FT}
4. POWER CONSUMPTION?MAX.48 W (at.20°C)
5. ROTATION? C.W.

(COPPER COIL)

NOTES

SURFACE TREATMENT :

BLACK PAINTING (CATHODIC ELECTRO−DEPOSITION)
EXCEPT FOLLOWING PARTS

1. FRICTION SURFACE
2. RIVET (MFZn2−B)
3. HUB INNER DIA.
4. FIELD CORE COIL ASSY (MFZn3)

CONFIDENTIAL

THE DRAWINGS AND TECHNICAL INFORMATION INCLUDED HEREIN ARE THE PROPERTY OF OGURA INDUSTRIAL AND CAN NOT BE DUPLICATED WITHOUT WRITTEN APPROVAL FROM OI.

SURFACE ROUGHNESS UNLESS OTHERWISE SPECIFIED		GENERAL TOLERANCE FOR CLASS 14 RANGE	TOL.
▽	50S	OVER 0.5 TO 6	± 0.1
▽▽	25S	6 30	± 0.2
▽▽▽	6S	30 120	± 0.3
▽▽▽▽	3S	120 315	± 0.5
▽▽▽▽	0.8S	315 1000	± 0.8

HISTORY 52022600 01
ISSUE NO
PLANT 2
ISSUE DATE

WORKING PROCESS
MATERIAL
MATERIAL CODE
MATERIAL SIZE
HEAT TRTM 0
SURFACE TRTM 0
PARTS CODE 5213100000
OGURA CLUTCH Co.,LTD.

APPROVED BY E.Maejima	DATE Apr.28.1997	SIZE A2	
CHECKED BY T.Arai	DATE Apr.28.1997	SCALE 1/1	
DESIGNED BY N.Kogaki	DATE Apr.26.1997		
DRAWN BY N.Kogaki	DATE Apr.26.1997		
CUSTOMER			
MODEL MA−N03D			
ASSY NO			
NAME MAGNETIC CLUTCH			
DWG NO 52022600 03		SHT. 1	