REV	REVISION STATUS				DATE	DR	CHK	APP
01	1	Housing and terminal change	(1)	2	Not assemble		N.S	Y.Z.

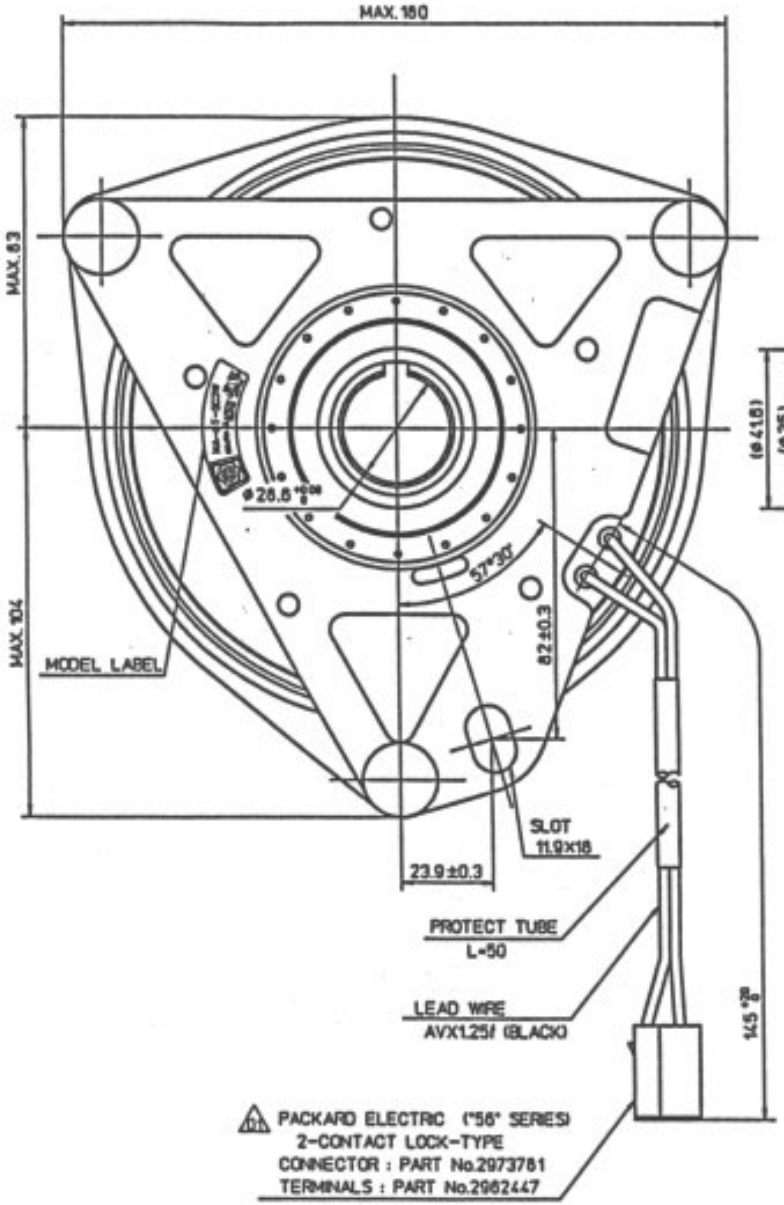

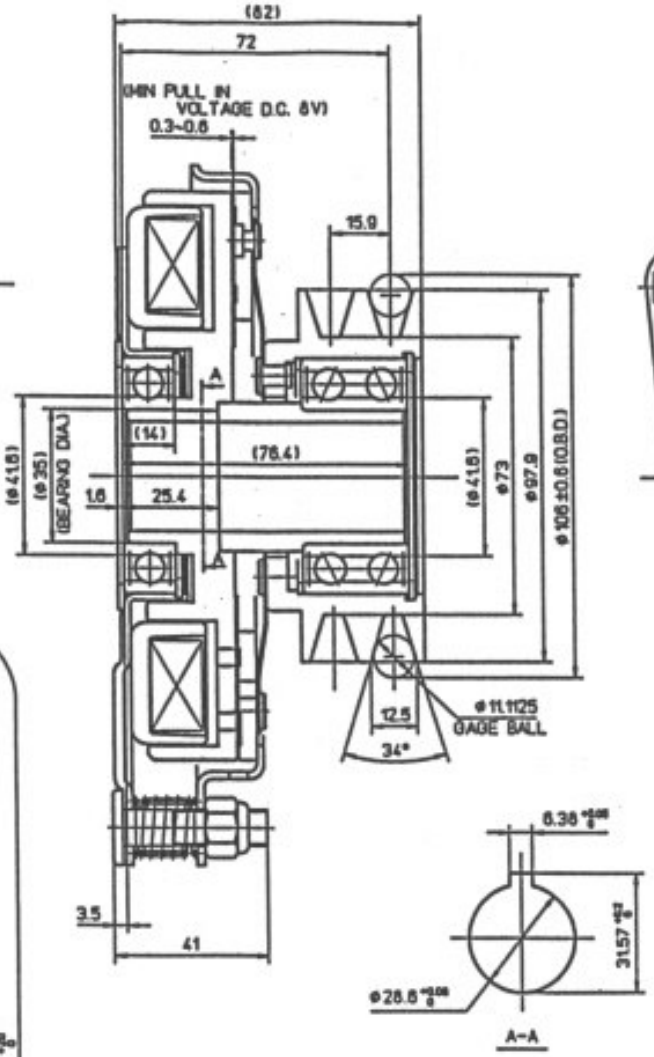

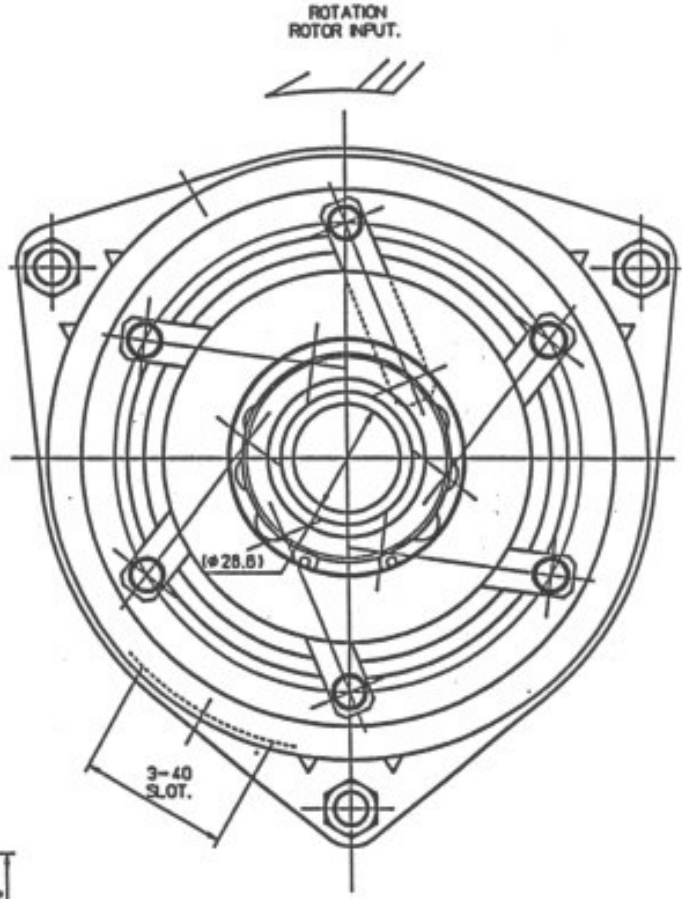

THE DRAWINGS AND TECHNICAL INFORMATION INCLUDED HEREIN ARE THE PROPERTY OF OGURA INDUSTRIAL AND CAN NOT BE DUPLICATED WITHOUT WRITTEN APPROVAL FROM OI.

SPECIFICATIONS

EXCITING VOLTAGE	D.C. 12 V
POWER CONSUMPTION	MAX. 50 W
STATIC CLUTCH TORQUE	149 N·m (110 LB·FT)
STATIC BRAKE TORQUE	3 N·m (2.2 LB·FT)

(Cu COIL)

SURFACE ROUGHNESS UNLESS OTHERWISE SPECIFIED	GENERAL TOLERANCE FOR CLASS "M"	WORKING PROCESS	APPROVED Apr.10'97
▽ 50S	RANGE / TOL.	MATERIAL	CHECKED Apr.10'97
▽▽ 25S		MATERIAL CODE	DESIGNED Apr.10'97
▽▽▽ 6S		MATERIAL SIZE	DRAWN BY Apr.10'97
▽▽▽▽ 3S		HEAT TREATMENT 0	CUSTOMER
▽▽▽▽▽ 0.8S		SURFACE TREATMENT 0	MODEL MA-GT-SC3W
HISTORY		PART CODE 5913100000	ASSY NO
ISSUE NO	PLANT 2	OGURA CLUTCH Co.LTD.	NAME MAGNETIC CLUTCH & BRAKE
ISSUE DATE			DWG NO 52016500 01

SIZE A2 SCALE 1/1 SHT 1