REV		REVISION STATUS		NOTE		DATE	CHG BY	CHK BY
01	4	Change form. etc.(DDF2 was DDF1)	(2)	2	Next assemble	Apr.25'97	N.S	M.I
02	5	Coil change.	(1)	2	Next assemble	Jan.22.99	N.S	T.A.
03	1	Lead wire change	(1)	2	Next assemble	Mar.24.99	N.S	T.A.

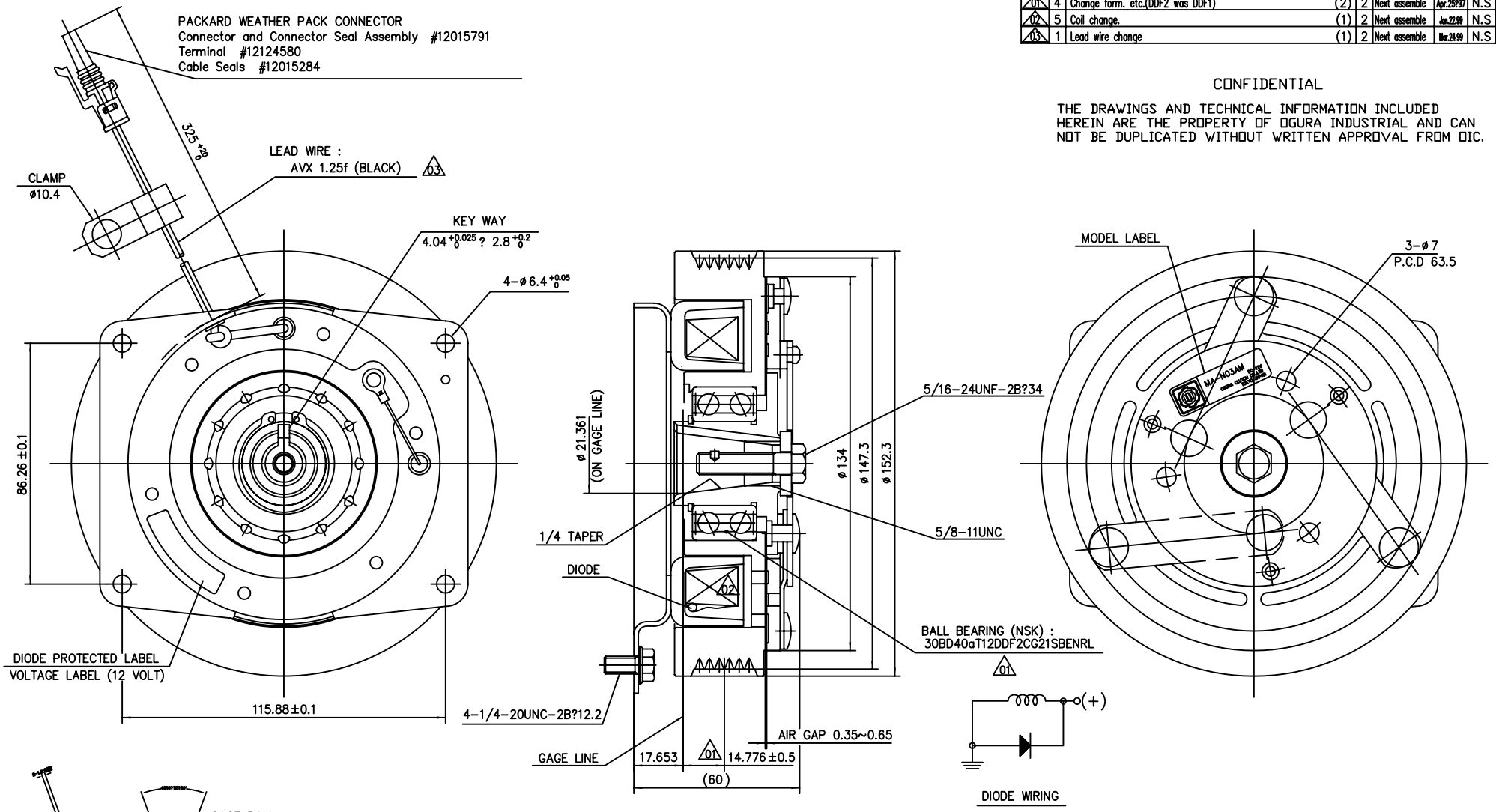

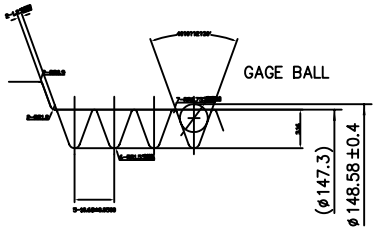

GROOVE DETAILS (S=3/1)

SPECIFICATIONS

1. EXCITING VOLTAGE?D.C.12 V
2. BELT? PLY ?V? 6K TYPE
3. STATIC TORQUE
   AFTER BURNISHING?102 N?m {75 LB?FT}
4. POWER CONSUMPTION?MAX.48 W (at.20℃)
5. ROTATION? C.W.

NOTES

SURFACE TREATMENT :

BLACK PAINTING (CATHODIC ELECTRO−DEPOSITION)
EXCEPT FOLLOWING PARTS

1. FRICTION SURFACE
2. RIVET (MFZn2−B)
3. HUB INNER DIA.
4. FIELD CORE COIL ASSY (MFZn3)

CONFIDENTIAL

THE DRAWINGS AND TECHNICAL INFORMATION INCLUDED HEREIN ARE THE PROPERTY OF OGURA INDUSTRIAL AND CAN NOT BE DUPLICATED WITHOUT WRITTEN APPROVAL FROM OIC.

SURFACE ROUGHNESS UNLESS OTHERWISE SPECIFIED		GENERAL TOLERANCE FOR CLASS 1 RANGE	TOL.
▽	50S	OVER 0.5 TO 6	± 0.1
▽▽	25S	6 30	± 0.2
▽▽▽	6S	30 120	± 0.3
▽▽▽	3S	120 315	± 0.5
▽▽▽▽	0.8S	315 1000	± 0.8

HISTORY 51852100 03
ISSUE NO
PLANT 2
ISSUE DATE

WORKING PROCESS
MATERIAL
MATERIAL CODE
MATERIAL SIZE
HEAT TRTM 0
SURFACE TRTM 0
PARTS CODE 5213100000
OGURA CLUTCH Co.,LTD.

APPD T.Ishimaru	DATE Oct.18'95	SIZE A2	
CHKD	DATE	SCALE 1/1	
CHKD K.Bungyama	DATE Oct.18'95		
DWN N.Ogata	DATE Oct.18'95		
CUSTOMER			
MODEL MA−N03AM			
ASSY NO			
NAME MAGNETIC CLUTCH			
DWG NO 51852100 03		SHT. 1	