| | | | | | | | |
|---|---|---|---|---|---|---|---|
| 11 | 9 | Change Field Core Assy etc. | | 2 | Not assemble | Sep.29 '93 | N.S | T.I. |
| 10 | 9 | Change Terminal Part Number | (1) | 4 | Be deposed | Dec.29 '93 | K.O | T.I. |
| | | | | | | | |

THE DRAWINGS AND TECHNICAL INFORMATION INCLUDED HEREIN ARE THE PROPERTY OF OGURA INDUSTRIAL AND CAN NOT BE DUPLICATED WITHOUT WRITTEN APPROVAL FROM OI.

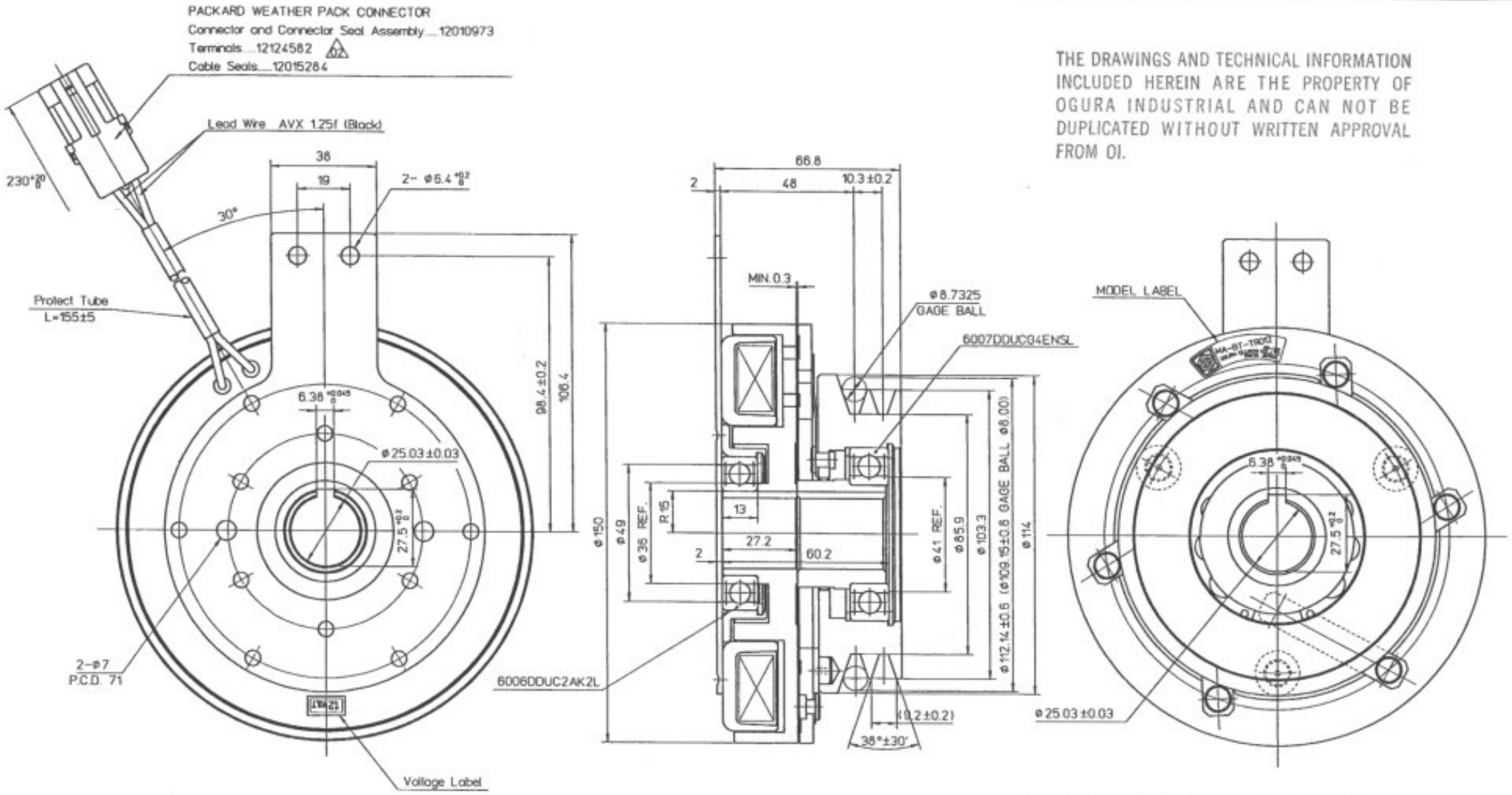


SPECIFICATION

| | |
|---|---|
| Exciting Voltage | D.C. 12 V |
| Power Consumption | Max. 46.6 W |

| | | | | | |
|---|---|---|---|---|---|
| SURFACE ROUGHNESS UNLESS OTHERWISE SPECIFIED | | GENERAL TOLERANCE FOR CLASS M | | WORKING PROCESS | |
| | | RANGE | TOL. | EDGE/CORNER BREAKS MAX 0.2 UNLESS NOTED | |
| ▽ | 50S | 0.5 6 | ± 0.1 | MATERIAL | |
| ▽▽ | 25S | 6 30 | ± 0.2 | MATERIAL CODE | |
| ▽▽▽ | 6S | 30 120 | ± 0.3 | MATERIAL SIZE | |
| ▽▽▽▽ | 3S | 120 315 | ± 0.5 | HEAT TRTM | 0 |
| ▽▽▽▽ | 0.8S | 315 1000 | ± 0.8 | SURFACE TRTM | 0 |
| HISTORY | | | | PARTS CODE | 5913100000 |
| ISSUE NO | | PLANT | 2 | OGURA CLUTCH Co.,LTD. | |
| ISSUE DATE | | | | | |

| | | | |
|---|---|---|---|
| APD | E. Maejima | DATE Nov. 13 '92 | SIZE A2 |
| CHKD | T. Ishimura | DATE Nov. 13 '92 | SCALE 1/1 |
| CHKD | H. Yoshihara | DATE Nov. 13 '92 | |
| DWN | T. Hirayama | DATE Nov. 13 '92 | |
| MODEL | MA-GT-TR012 | | |
| ASSY NO | | | |
| NAME | MAGNETIC CLUTCH | | |
| DWG NO | 51529400 | | SHT. 1 |