REV		REVISION STATUS		NOTE	DATE	CHG BY	CHK BY
01	2	Chenge length of Protect Tube, Chenge rotaion,Name plate	(3)	4 Be disposed	Aug.20'90	T.T	T.I.
02	1	150 Was 100	(1)	3 Next manufacturing	Mar.31'92	T.T	T.I.

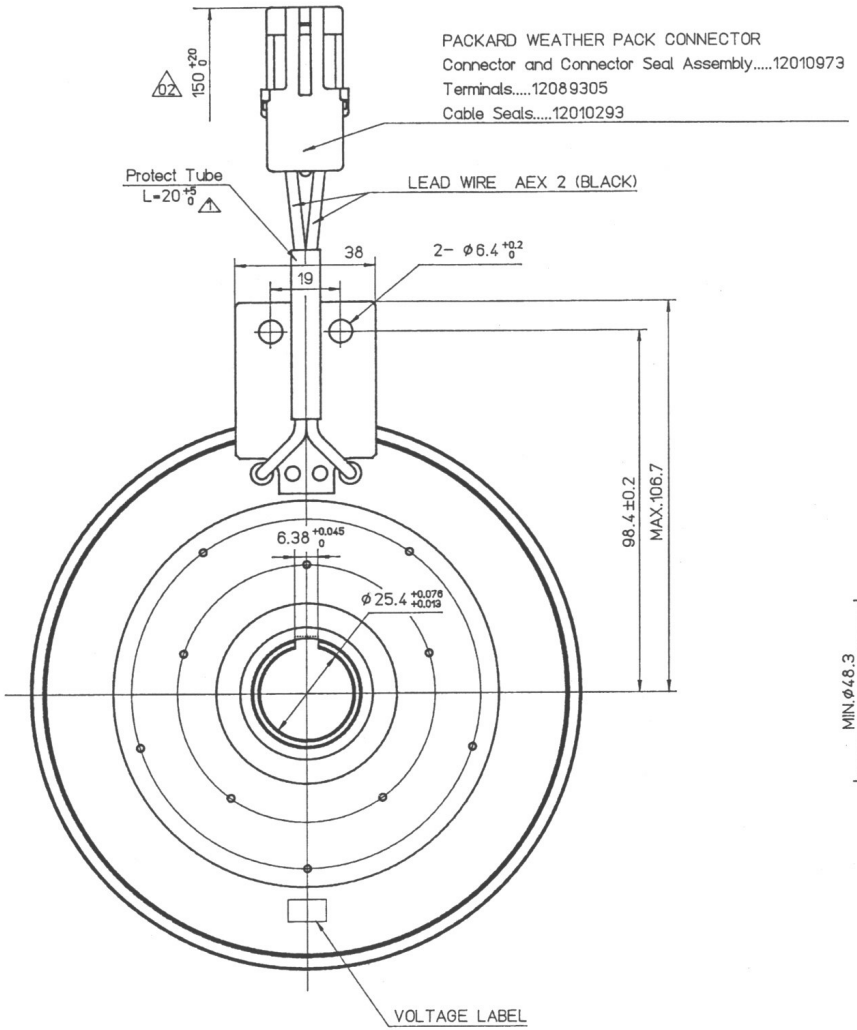

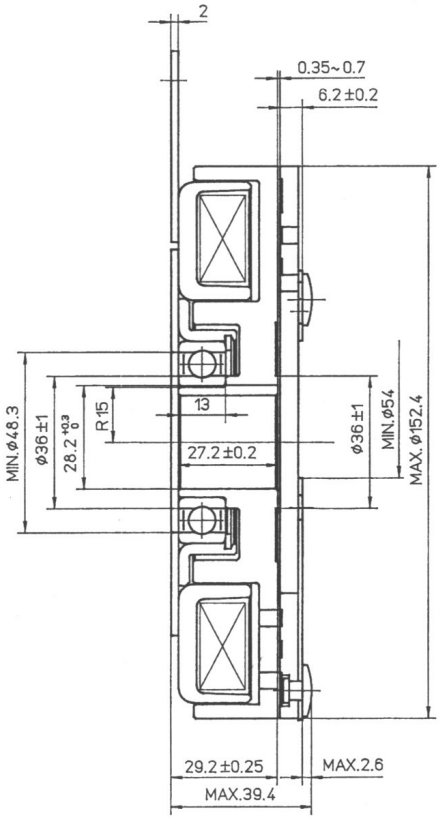

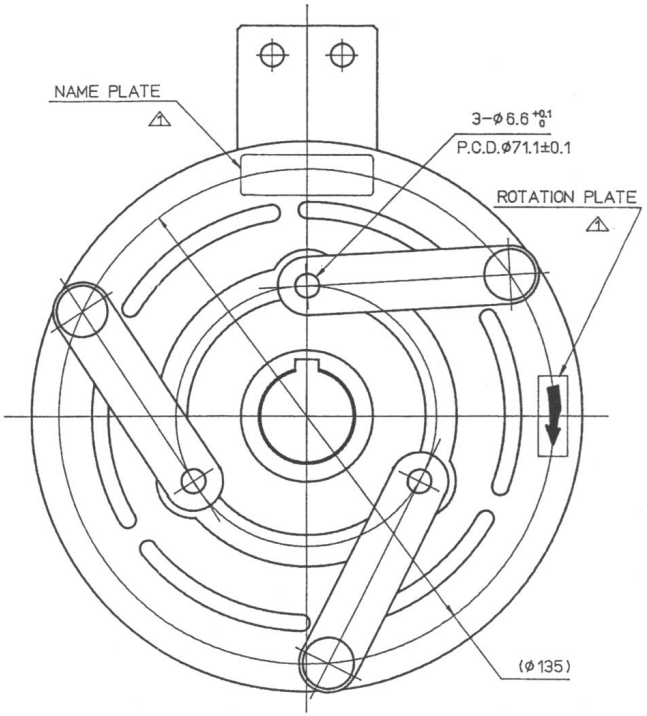

THE DRAWINGS AND TECHNICAL INFORMATION INCLUDED HEREIN ARE THE PROPERTY OF OGURA INDUSTRIAL AND CAN NOT BE DUPLICATED WITHOUT WRITTEN APPROVAL FROM OI.

SPECIFICATION

EXCITING VOLTAGE	D.C.12V
POWER CONSUMPTION	47W
STATIC TORQUE	110LB.FTS

SURFACE ROUGHNESS UNLESS OTHERWISE SPECIFIED		GENERAL TOLERANCE FOR CLASS 14		WORKING PROCESS	
		RANGE	TOL.	EDGE/CORNER BREAKS MAX C0.2 UNLESS NOTED	
▽	50S	OVER 0.5 TO 6	± 0.1	MATERIAL	
▽▽	25S	6 30	± 0.2	MATERIAL CODE	
▽▽▽	6S	30 120	± 0.3	MATERIAL SIZE	
▽▽▽	3S	120 315	± 0.5	HEAT TRTM	0
▽▽▽▽	0.8S	315 1000	± 0.8	SURFACE TRTM	0
HISTORY				PARTS CODE	5913100000
ISSUE NO		PLANT	2	OGURA CLUTCH Co.,LTD.	
ISSUE DATE					

APPD	E.Maejima	DATE Aug.20'90	SIZE A2
CHKD	T.Ishimaru	DATE Aug.20'90	SCALE 1/1
CHKD		DATE	
DWN	T.Takahashi	DATE Aug.20'90	
CUSTOMER			
MODEL	MA-7F-AM		
ASSY NO			
NAME	MAGNETIC CLUTCH		
DWG NO	51271700 02		SHT. 1