REV		REVISION STATUS		NOTE	DATE	DRD BY	CHK BY
4	9	Change Surface Treatment etc.		2 Mod. assembly	Apr.01 '93	N.S	T.I.
3	3	Correct mistakes	(3)	4 Re deposed	Sep.01 '96	N.S	T.I.

THE DRAWINGS AND TECHNICAL INFORMATION INCLUDED HEREIN ARE THE PROPERTY OF OGURA INDUSTRIAL AND CAN NOT BE DUPLICATED WITHOUT WRITTEN APPROVAL FROM OI.

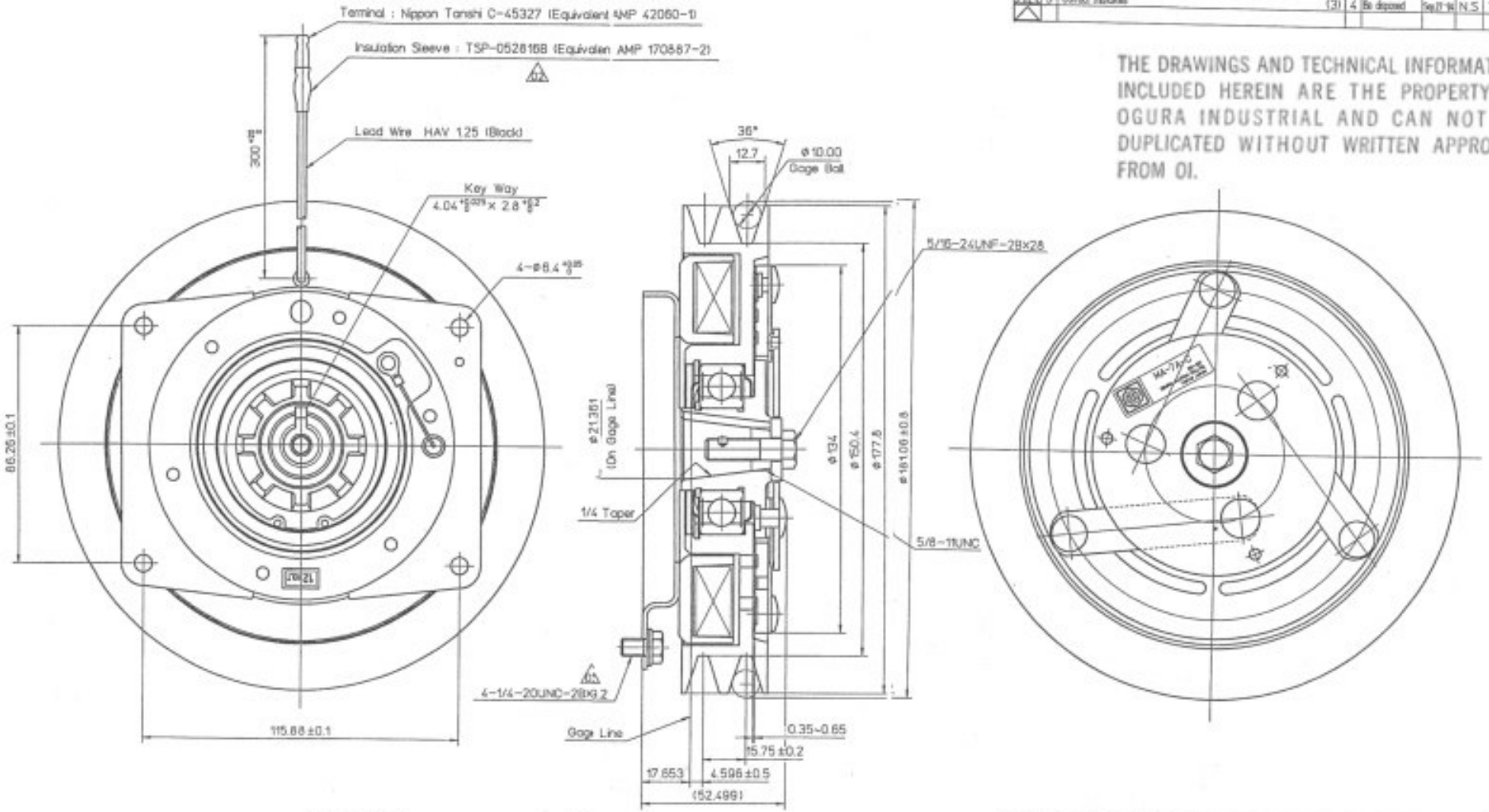

SPECIFICATION

Exciting Voltage	D.C. 12 V
Power Consumption	Max. 48.6 W (Cu Coil)

NOTES

Surface Treatment Black painting (cathodic electro-deposition)

Except following parts

Friction surface

Rivet (MFZn2-B)

Hub inner DIA.

Field core coil assy (MFZn3)

SURFACE ROUGHNESS UNLESS OTHERWISE SPECIFIED	GENERAL TOLERANCE FOR BLASS M	WORKING PROCESS	DRW E.Maejima DATE Apr.20 '93 SIZE A2
	RANGE TOL.		CHKD T.Ishizaru DATE Apr.20 '93 SCALE 1/1
		MATERIAL	CHKD H.Yoshihara DATE Apr.20 '93
		MATERIAL CODE	APPD DATE Apr.20 '93
		MATERIAL SIZE	CUSTOMER
		HEAT TREAT 0	MODEL MA-7A-C
HISTORY		SURFACE TREAT D	ASSY NO
ISSUE NO	PLANT 2	PARTS CODE 5213100000	NAME MAGNETIC CLUTCH
ISSUE DATE		OGURA CLUTCH Co.,LTD.	DWG NO 51260600 SHT 1