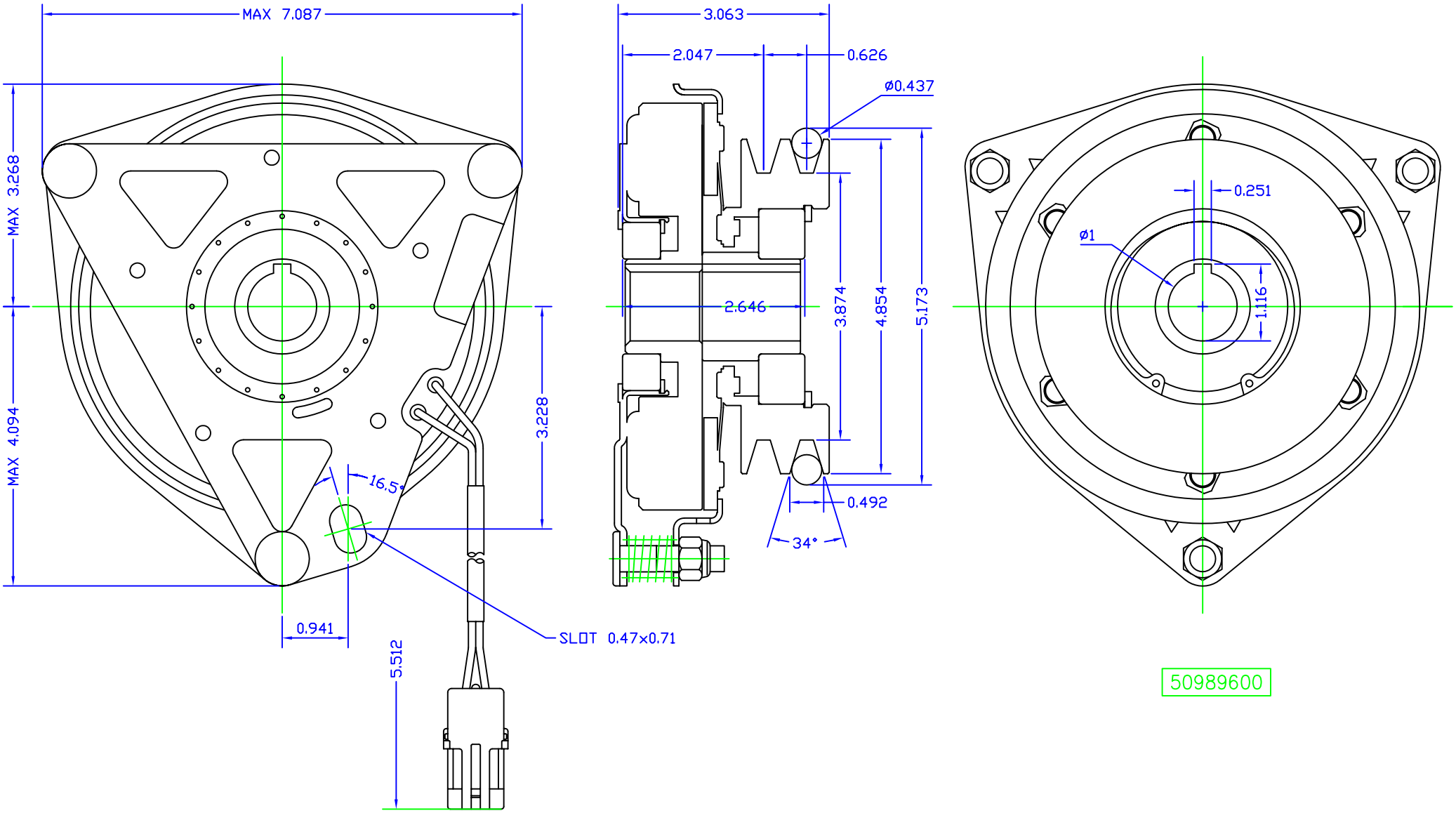
MAX 7.087
MAX 3.268
MAX 4.094
3.228
16.5°
0.941
5.512
SLOT 0.47×0.71
3.063
2.047
0.626
ø0.437
2.646
3.874
4.854
5.173
0.492
34°
0.251
ø1
1.116
50989600