REV		REVISION STATUS	NOTE		DATE	CHD BY	CHK BY
01	9	Change Field Core Assy etc.	2	Next assemble	Sep.30 '93	N.S	T.I.

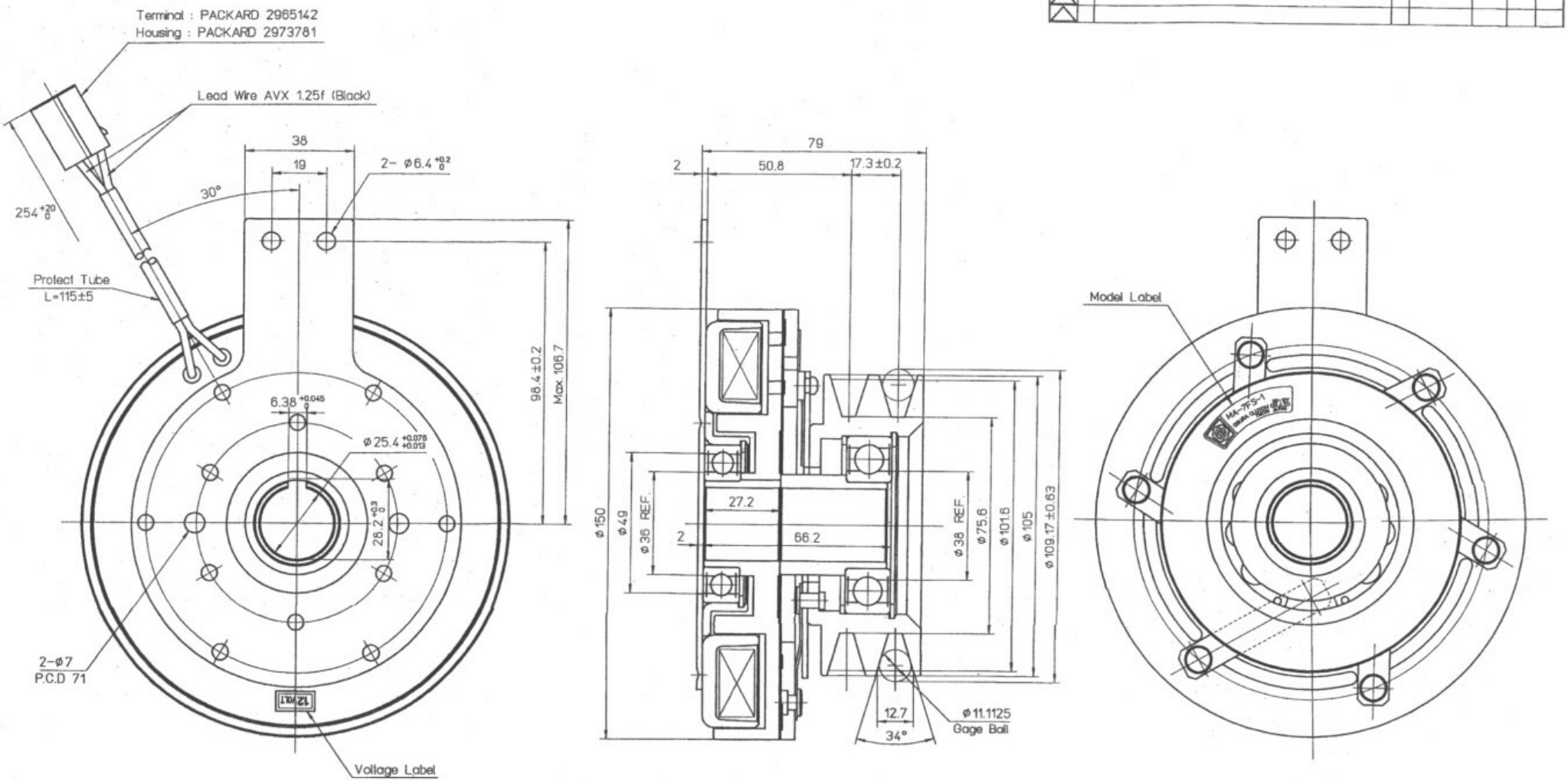

Rotation

SPECIFICATIONS

Exciting Voltage	D.C. 12 V
Power Consumption	Max. 50 W
Static Torque	122 N·m (90 lbw·ft)

THE DRAWINGS AND TECHNICAL INFORMATION INCLUDED HEREIN ARE THE PROPERTY OF OGURA INDUSTRIAL AND CAN NOT BE DUPLICATED WITHOUT WRITTEN APPROVAL FROM OI.

SURFACE ROUGHNESS UNLESS OTHERWISE SPECIFIED		GENERAL TOLERANCE FOR CLASS M			WORKING PROCESS	APPD E.Maejima	DATE Sep.30 '93	SIZE A2
		RANGE		TOL.	EDGE/CORNER BREAKS MAX C0.2 UNLESS NOTED	CHKD T.Ishimaru	DATE Sep.30 '93	SCALE 1/1
▽	50S	OVER 0.5	TO 6	± 0.1	MATERIAL	CHKD H.Yoshihara	DATE Sep.30 '93	
▽▽	25S	6	30	± 0.2	MATERIAL CODE	DWN N.Sugiki	DATE Sep.30 '93	
▽▽▽	6S	30	120	± 0.3	MATERIAL SIZE	CUSTOMER		
▽▽▽	3S	120	315	± 0.5	HEAT TRTM 0	MODEL MA-7FS-1		
▽▽▽▽	0.8S	315	1000	± 0.8	SURFACE TRTM 0	ASSY NO		
HISTORY						NAME MAGNETIC CLUTCH		
ISSUE NO		PLANT 2			PARTS CODE 5913100000			
ISSUE DATE					OGURA CLUTCH Co.,LTD.	DWG NO 50981200 01		SHT. 1