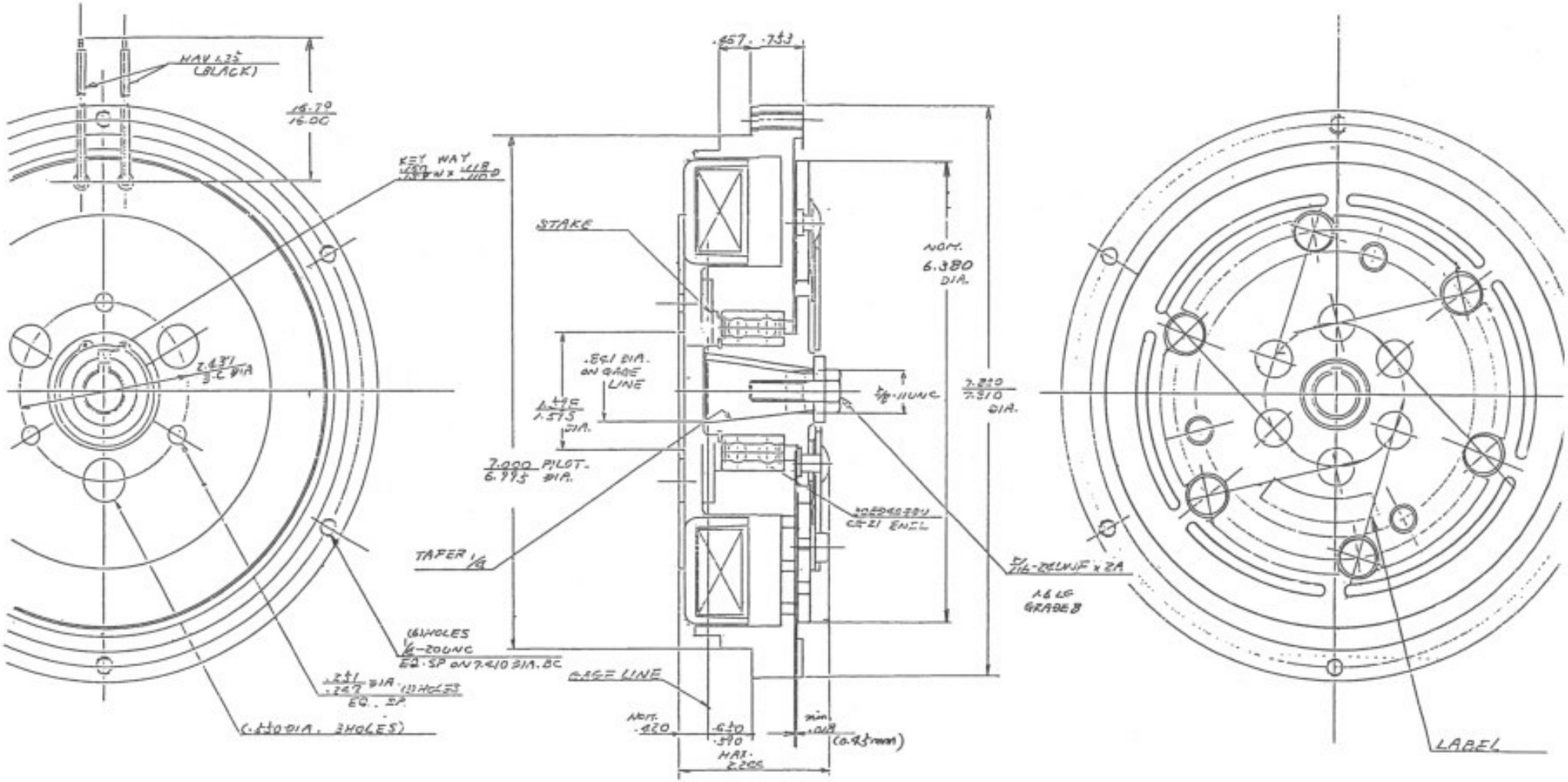

THE DRAWINGS AND TECHNICAL INFORMATION INCLUDED HEREIN ARE THE PROPERTY OF OGURA INDUSTRIAL AND CAN NOT BE DUPLICATED WITHOUT WRITTEN APPROVAL FROM OI.

EXCITING VOLTAGE DC 12 V
POWER CONSUMPTION 30 W
STATIC TORQUE @.75 FT·LB
ARM. SURFACE HARDNESS MIN. HV600.

@ Jan. 30 '87 OK

CUSTOMER				OGURA CLUTCH CO., LTD. TOKYO / JAPAN
APPD		DATE		MODEL MA-PM01H3
CHKD		DATE	Sep. 25 '86	
DWN		DATE	Sep. 11 '86	NAME ELECTRO-MAGNETIC CLUTCH
		SCALE	1/1	DWG. NO 5091 9000 Δ