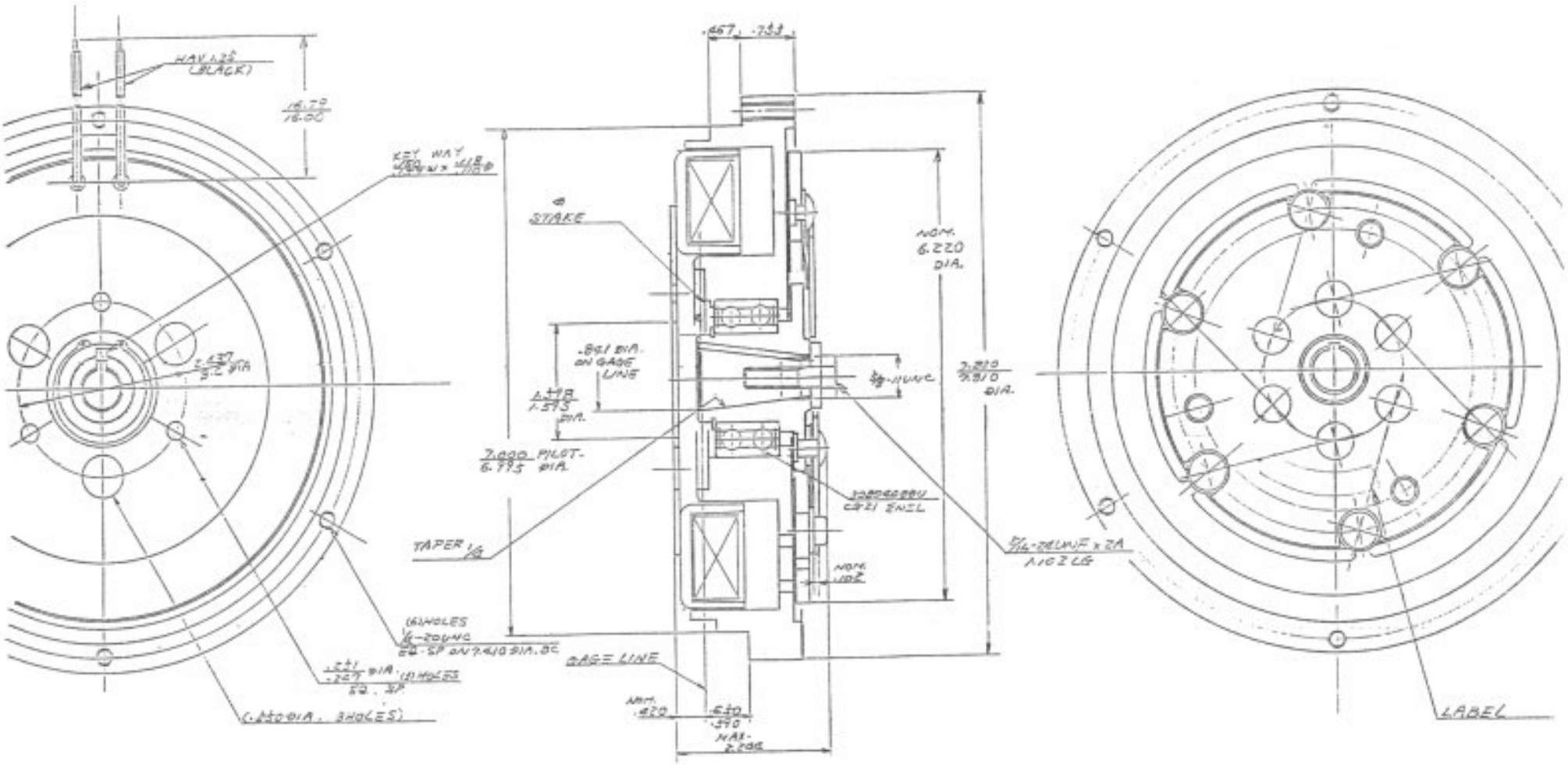

THE DRAWINGS AND TECHNICAL INFORMATION INCLUDED HEREIN ARE THE PROPERTY OF OGURA INDUSTRIAL AND CAN NOT BE DUPLICATED WITHOUT WRITTEN APPROVAL FROM OI.

EXCITING VOLTAGE DC 12 V
POWER CONSUMPTION 40 W
STATIC TORQUE 160 FT.LB

CUSTOMER			OGURA CLUTCH CO., LTD. TOKYO / JAPAN
APPD		DATE	MODEL MA-PM01HZ
CHKD		DATE	NAME ELECTRO-MAGNETIC CLUTCH
DWN		DATE	
		SCALE 1/1	DWG. NO 50836500