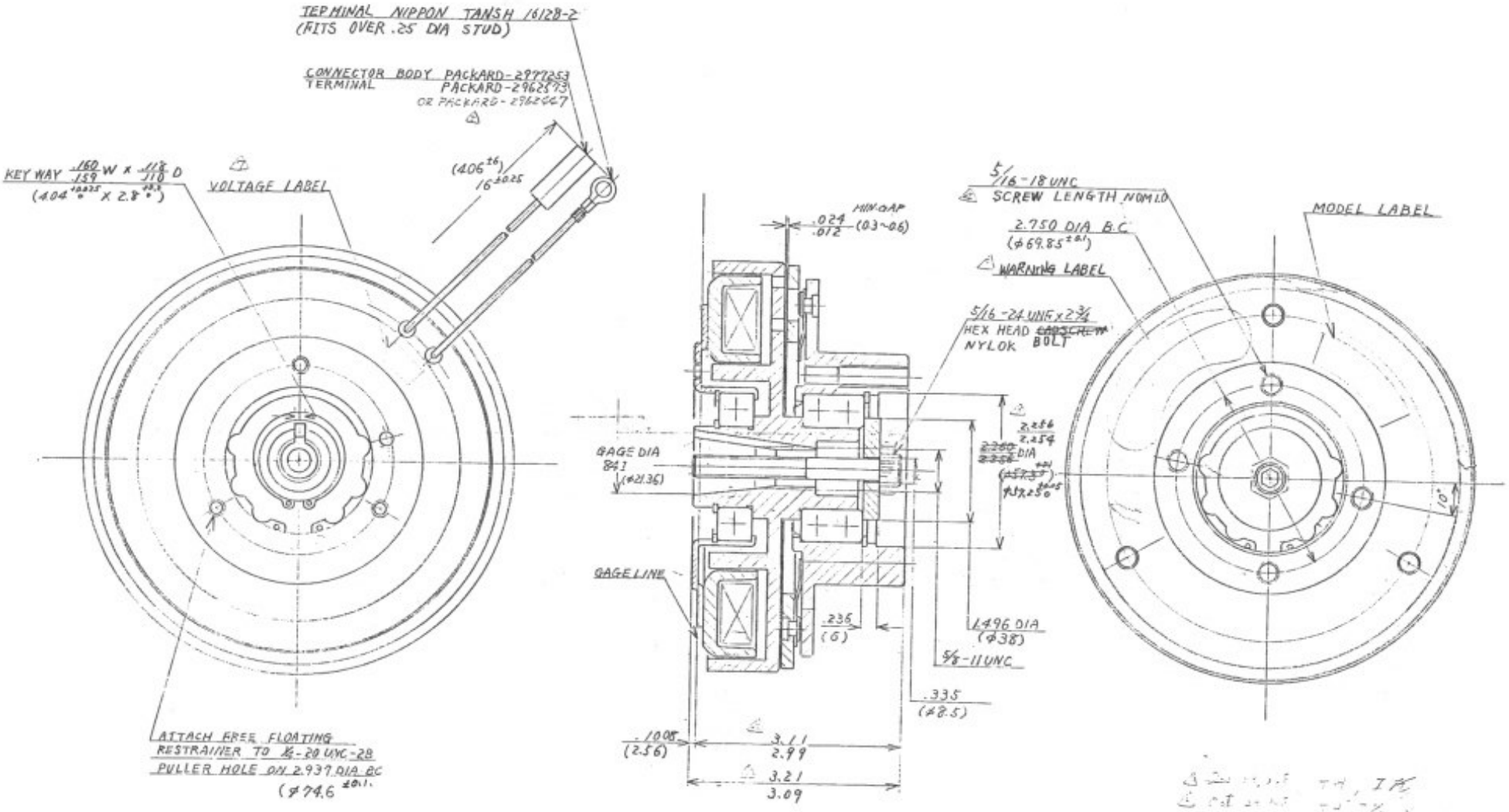

THE DRAWINGS AND TECHNICAL INFORMATION INCLUDED HEREIN ARE THE PROPERTY OF OGURA INDUSTRIAL AND CAN NOT BE DUPLICATED WITHOUT WRITTEN APPROVAL FROM OI.

EXCITING VOLTAGE	DC 12 V
POWER CONSUMPTION	60 W
STATIC TORQUE (OUT OF BOX)	35 LB. FEET (5.0 kg-m)
STATIC TORQUE (AFTER BURNISHING) MIN	100 LB FEET (13.8 kg-m)

△ [illegible] TH, IK
△ Oct 24 '85 [illegible]
△ Mar 13 '85 T.J. TK
△ Aug 31 '85 M.K EM
△ [illegible] [illegible]
△ Apr 22 '83 [illegible] EM

CUSTOMER				OGURA CLUTCH CO., LTD. TOKYO / JAPAN
APPD	T. Ogura	DATE	7. 6. 1984	MODEL MA-WPH
CHKD	E. Murphy	DATE	Oct 8 '84	NAME ELECTORO MAGNETIC CLUTCH
DWN	T. Suzuki	DATE	11. 2. 83	
		SCALE	1/1	DWG. NO 505894009