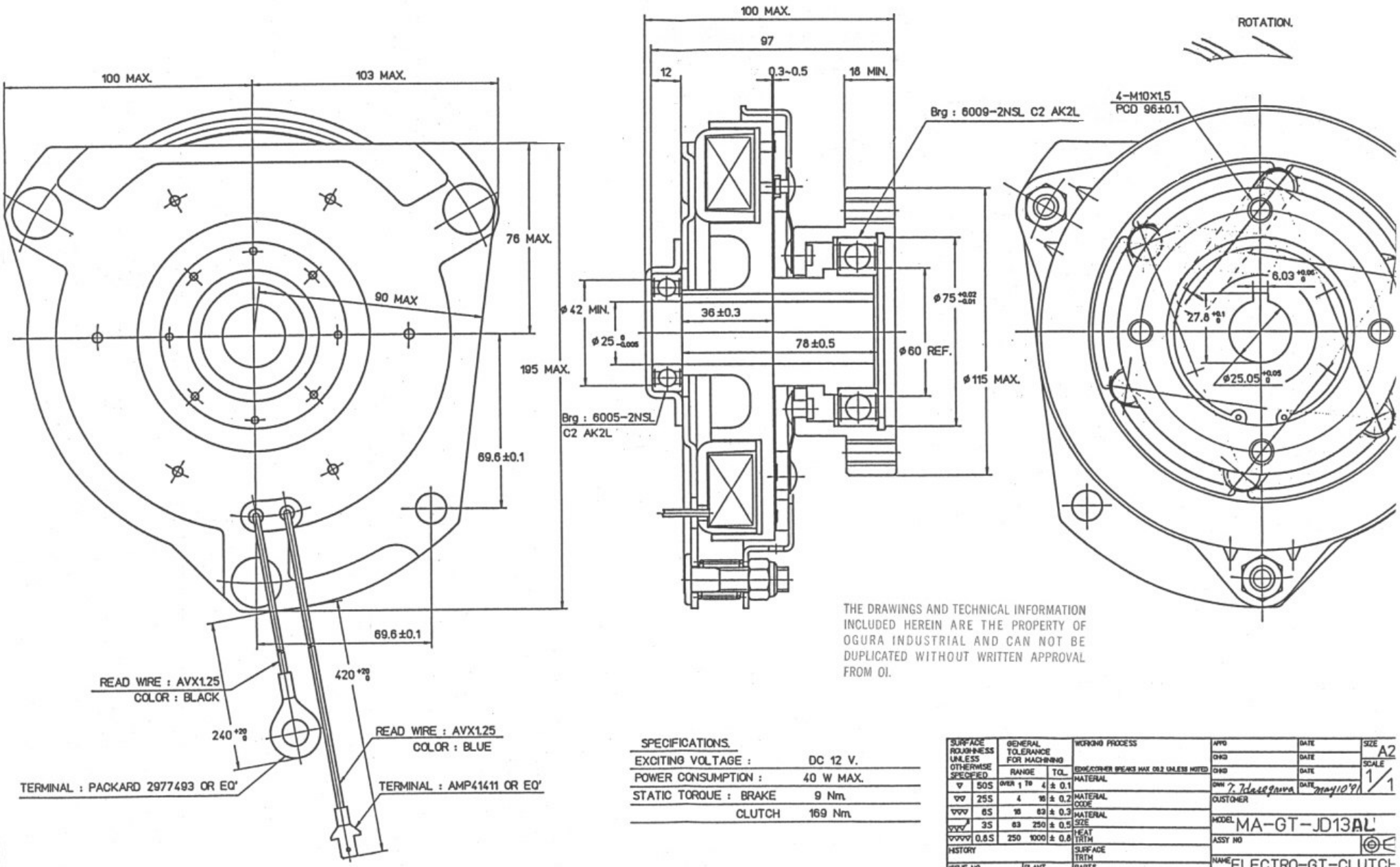

THE DRAWINGS AND TECHNICAL INFORMATION INCLUDED HEREIN ARE THE PROPERTY OF OGURA INDUSTRIAL AND CAN NOT BE DUPLICATED WITHOUT WRITTEN APPROVAL FROM OI.

SPECIFICATIONS.

EXCITING VOLTAGE :		DC 12 V.
POWER CONSUMPTION :		40 W MAX.
STATIC TORQUE :	BRAKE	9 Nm.
	CLUTCH	169 Nm.

SURFACE ROUGHNESS UNLESS OTHERWISE SPECIFIED		GENERAL TOLERANCE FOR MACHINING		
		RANGE		TOL.
▽	50S	OVER 1 TO	4	± 0.1
▽▽	25S	4	16	± 0.2
▽▽▽	6S	16	63	± 0.3
▽▽▽▽	3S	63	250	± 0.5
	0.8S	250	1000	± 0.8

HISTORY
ISSUE NO | PLANT
ISSUE DATE

WORKING PROCESS
EDGE/CORNER BREAKS MAX 0.2 UNLESS NOTED
MATERIAL
MATERIAL CODE
MATERIAL SIZE
HEAT TRITM
SURFACE TRITM
PARTS CODE
OGURA CLUTCH Co.,LTD.

APPD | DATE
CHKD | DATE
CHKD | DATE
DWN T. Hasegawa | DATE May 10 '91
CUSTOMER
MODEL MA-GT-JD13AL
ASSY NO
NAME ELECTRO-GT-CLUTCH
DWG NO 50516100 | SHT. 1

SIZE A2
SCALE 1/1