REV		REVISION STATUS		NOTE		DATE	DR BY	CK BY
2	9	Change computer aided design		1	Immediately	Jun.03'93	T H	H Y
1	1	Addition of Note AVX1.25f Was AVX1.25	(2)	2	Next assemble	Oct.02'93	N S	T L

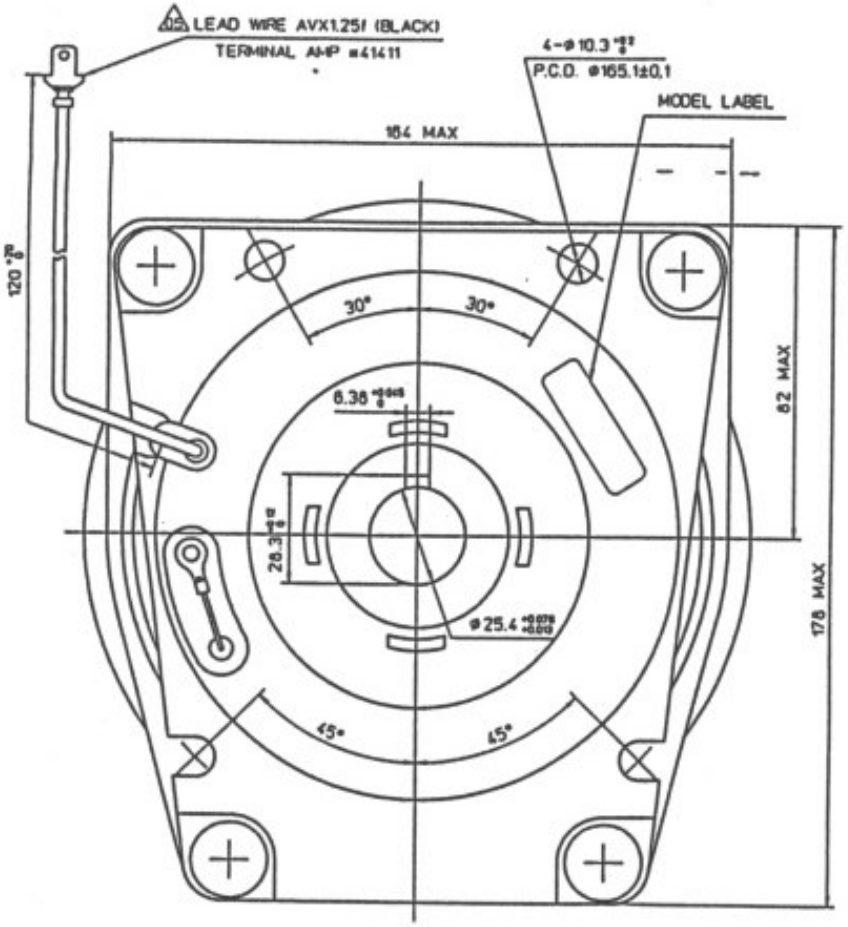

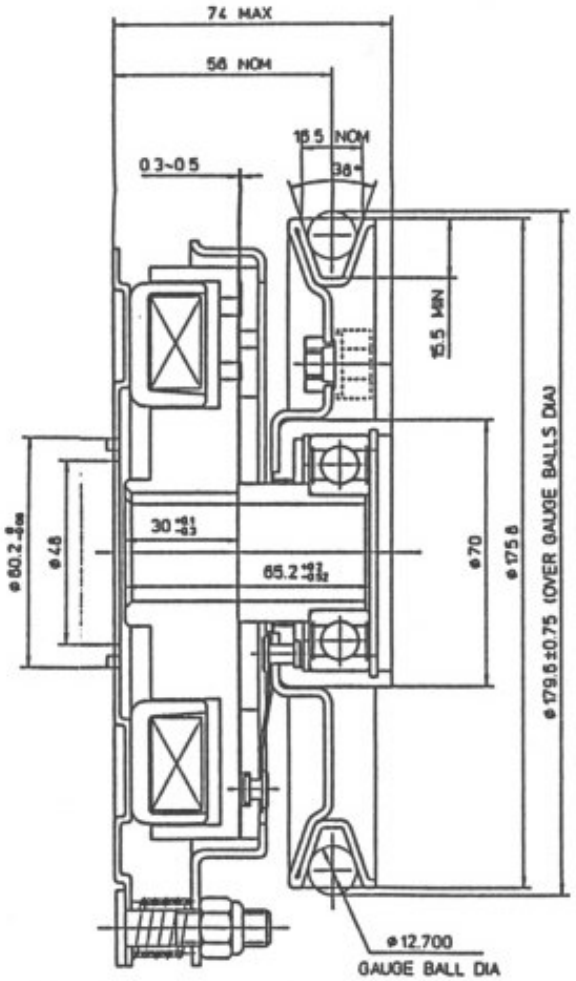

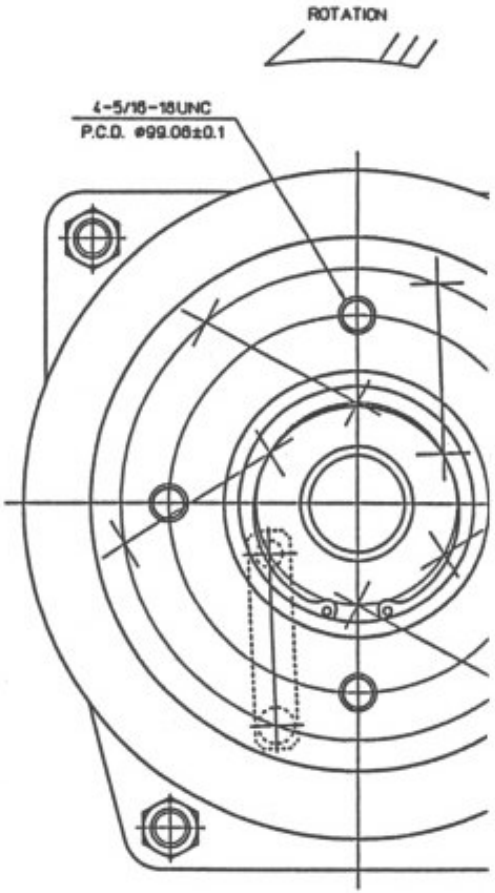

SPECIFICATIONS	
EXCITING VOLTAGE	DC 12 V
POWER CONSUMPTION	47 W
STATIC CLUTCH TORQUE	90LbFI
STATIC BRAKE TORQUE	2.2LbFI

THE DRAWINGS AND TECHNICAL INFORMATION INCLUDED HEREIN ARE THE PROPERTY OF OGURA INDUSTRIAL AND CAN NOT BE DUPLICATED WITHOUT WRITTEN APPROVAL FROM OI.

NOTE

1. THIS PARTS MUST ASSEMBLE THE COILSPRINGS & NUTS.

注記

1. コイルスプリング、ナットは組立時に装着のこと。(ナットは手にて締まる程度)

SURFACE ROUGHNESS UNLESS OTHERWISE SPECIFIED	GENERAL TOLERANCE FOR CLASS M	WORKING PROCESS	DWG E.Mogami	DATE Jun.03'93	SIZE A2
9 505	RANGE / TOL.	EDGE/CORNER BREAKS MAX 0.02 UNLESS NOTED	DWN T.Ishimaru	DATE Jun.03'93	SCALE 1/1
99 255	0.5 ~ 6 ± 0.1	MATERIAL	CHK H.Yoshihara	DATE Jun.03'93	
999 65	6 ~ 30 ± 0.2	MATERIAL CODE	APP T.Kitamura	DATE Jun.03'93	
9999 35	30 ~ 120 ± 0.3	MATERIAL SIZE	CUSTOMER		
99999 0.65	120 ~ 315 ± 0.5	HEAT TREAT 0	MODEL MA-GT-JD7		
999999 0.65	315 ~ 1000 ± 0.8	SURFACE TREAT 0	ASSY NO		
HISTORY		PART'S CODE 5913100000	NAME MAGNETIC CLUTCH & BRAKE		
ISSUE NO	PLANT 2	OGURA CLUTCH Co.,LTD.	DWG NO 50450200		Sht. 1
ISSUE DATE					