REV		REVISION STATUS		NOTE		DATE	DWG BY	CHK BY
3	9	Change Surface Treatment etc.		2	Next assembly	Jan.23'93	N.S	T.J.
2	9	Change Static Torque	(2)	4	To disposal	Sep.16'92	N.S	T.J.
1	4	Change Ball Bearing etc.	(3)	2	Next assembly	Dec.07'88	N.S	T.J.

THE DRAWINGS AND TECHNICAL INFORMATION INCLUDED HEREIN ARE THE PROPERTY OF OGURA INDUSTRIAL AND CAN NOT BE DUPLICATED WITHOUT WRITTEN APPROVAL FROM OI.

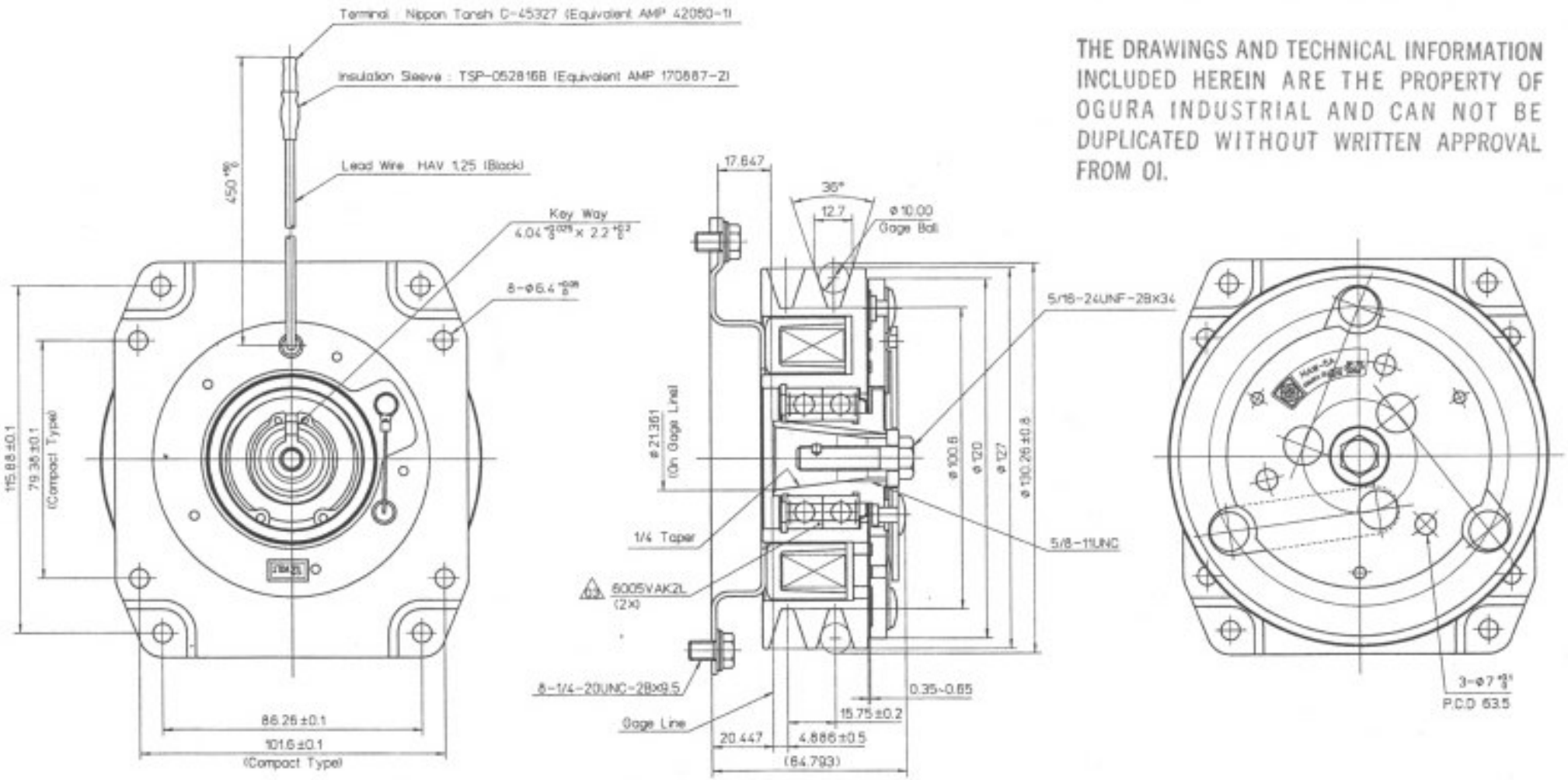

SPECIFICATION

Exciting Voltage	D.C. 12 V
Power Consumption	Max. 45.2 W
Initial Static Torque	30 N·m (22 lbw·ft) △2
Static Torque (Final)	79 N·m (58 lbw·ft) △2
Weight	3.0 kg △3

NOTES

4. Surface Treatment Black painting (cathodic electro-deposition)

Except following parts

- Friction surface
- Rivet (MFZn2-B) △3
- Hub inner DIA.
- Field core coil assy (MFZn3)

SURFACE ROUGHNESS UNLESS OTHERWISE SPECIFIED		GENERAL TOLERANCE FOR CLASS M		WORKING PROCESS	APP. E.Moejima DATE Jan.23'93 SIZE A2
		RANGE	TOL.	CHALLENGER BREAKS MAX OSJ UNLESS NOTED	DWG T.Ishimaru DATE Jan.23'93 SCALE 1/1
▽	50S	0.5	±0.1	MATERIAL	DWG H.Yoshihara DATE Jan.23'93
▽▽	25S	6 30	±0.2	MATERIAL CODE	DATE Jan.23'93
▽▽▽	6S	30 120	±0.3	MATERIAL SIZE	CUSTOMER
▽▽▽▽	3S	120 315	±0.5	PLAT TREM D	MODEL MAW-5A
▽▽▽▽	0.8S	315 1000	±0.8	SURFACE TREM D	ASSY NO
HISTORY				PARTS CODE 5213100000	NAME MAGNETIC CLUTCH
ISSUE NO		PLANT 2		OGURA CLUTCH Co.,LTD.	DWG NO 50327200 △3 SHT. 1
ISSUE DATE					